A numerical study of wind nuisance for a high-rise building group

B. Blocken & S. Roels
Laboratory of Building Physics, Katholieke Universiteit Leuven, Leuven, Belgium

J. Carmeliet
Laboratory of Building Physics, Katholieke Universiteit Leuven, Leuven, Belgium
FAGO, Technische Universiteit Eindhoven, Eindhoven, The Netherlands

ABSTRACT: High-rise buildings often give rise to wind discomfort problems. First, some brief general considerations on building aerodynamics and an illustration of wind nuisance are given. Next, the numerical study is presented that was performed to examine wind conditions in the designed Silvertop Tower passages. In a first step, the numerical model (CFD) will be validated by comparison with wind tunnel measurements for a simple slab type building. After that, it is applied to evaluate wind climate in the Silvertop Tower case study. Calculations will indicate that wind comfort in the passages is highly unacceptable. Various remedial measures are suggested and discussed, most of which conflict with the envisaged architectural design. Finally, a rather unconventional solution is suggested and analysed, where sliding doors are mounted at both ends of each passage. The opening and closing of the doors will be controlled based on local wind climate.

1 INTRODUCTION

Buildings inevitably change the wind environment in their surroundings. Problems concerning the pedestrian-level wind environment are not new but still up to date. Already before the start of the Christian calendar, Vitruvius suggested that house blocks should best be oriented at an angle of 45° to prevailing winds so that "winds strike against the angles of the blocks and their force be broken up and dispersed". Especially since the past century, wind nuisance near buildings has clearly come to the fore. The construction of high-rise buildings has appeared to introduce zones of increased wind speed at pedestrian level. High wind speeds at pedestrian level are experienced as uncomfortable mainly by their mechanical effect on people. The thermal effect is of lesser importance (Bottema 1993). In many cases, wind nuisance has proven detrimental to the image and success of new buildings (Durgin & Chock 1982). Wise (1970), for one, reports about shops that are left untenanted because of the windy environment which discouraged shoppers. Scientific research on the subject consequently developed, the bulk of which was conducted in the seventies and eighties. Because of the complexity of the prediction of air flow patterns and wind speed values around high-rise building groups, researchers have for a long time been using wind tunnel testing. In the past decade, numerical modelling (CFD - Computational Fluid Dynamics) has become available as an additional tool (Bottema et al. 1991, Bottema 1993, Panneer Selvam 1996, Baskaran & Kashef 1996, Stathopoulos & Baskaran 1996, He & Song 1999, Hirsch et al. 2002, Wisse et al. 2002, Westbury et al. 2002). In the present paper, a numerical study of wind nuisance for a high-rise building group (the Silvertop Towers) is presented. The focus will be on the passages that are to be constructed through these towers as part of a redevelopment project. The study starts with a (limited) model validation. Next, the airflow field around and through the towers is calculated and wind climate in the passages is evaluated. Finally, various remedial measures are suggested to improve wind climate. Before going into this, first, some examples of building aerodynamics and wind nuisance are presented.

2 BUILDING AERODYNAMICS AND WIND NUISANCE

When a building is placed in an unobstructed wind flow, a complex wind pattern develops around it.

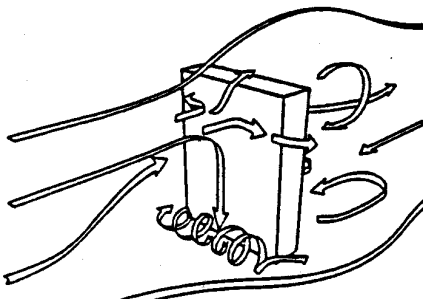

Figure 1. Wind flow around a wide high-rise building slab.

Figure 1 illustrates wind flow around a wide high-rise building slab. At a certain height of the building, a stagnation point is observed at which the flow divides. Part of it is flowing up the face of the slab, part is flowing around the vertical slab edges. A large part is moving downwards and generates a standing vortex in front of the building, that sweeps around the building corners at pedestrian level (corner streams). High wind speed values will be felt by pedestrians in front of the building slab (standing vortex) and near and downstream of the windward building corners (corner streams). These regions are indicated in Figure 2 together with typical values of the wind amplification factor γ. This factor is a measure for the increase in wind speed at pedestrian level by the presence of the building. It is defined as the wind speed at the location divided by the wind speed that would exist at the same location if the buildings were absent (free field conditions).

The presence of multiple buildings with different configurations and of buildings details (such as passages through building and canopies) further complicate the picture. Wind tunnel and CFD studies have been used to identify wind comfort trouble spots in these cases. Common trouble spots are passages between and passages through buildings (Figs. 2-3). These have been dealt with by – among others - Wise (1970), Melbourne & Joubert (1971), Wiren (1975), Gandemer (1975), Stichting Bouwresearch (1979a, b, 1982a, b), Stathopoulos & Storms (1986), Bottema (1993), Panneer Selvam (1996), Baskaran & Kashef (1996), Stathopoulos & Baskaran (1996). In passages between buildings, the high wind speed mainly results from the addition of the corner streams of each building (Bottema 1993). In through-passages or gaps, high wind speed is caused by pressure short circuiting between wind (overpressure p+) and leeward (underpressure p-) facade (Fig. 2).

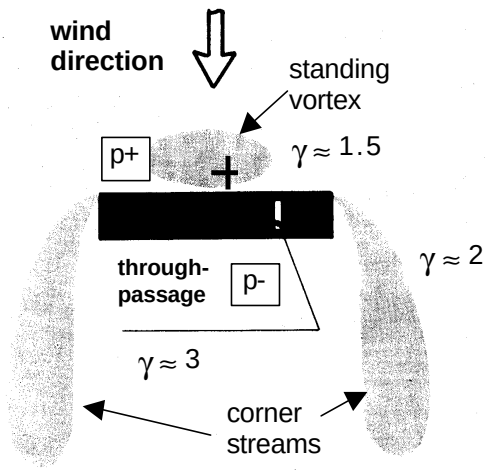

Figure 2. Top view of slab type high-rise building. High wind speed regions with typical values of the wind amplification factor are indicated: the standing vortex, the corner streams, a through-passage.

In general, amplification factors in through-passages are significantly higher than in passages between buildings. Wind conditions in through-passages are almost always unfavourable.

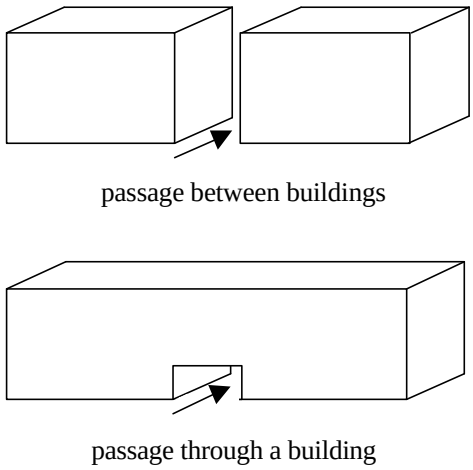

Figure 3. A passage between buildings and a passage through a building.

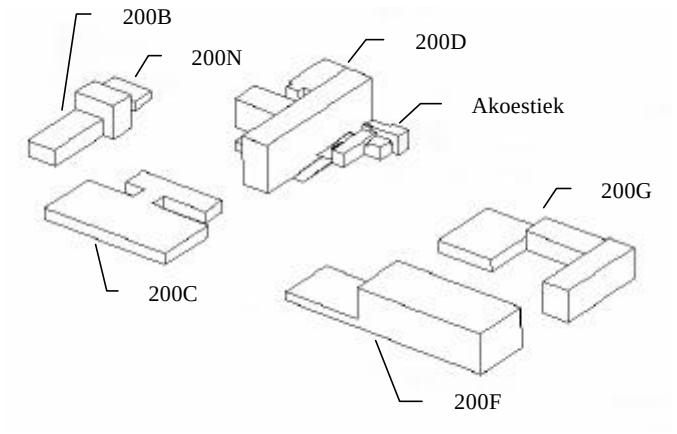

Figure 4. Perspective view of part of the University Campus Arenberg of the KULeuven.

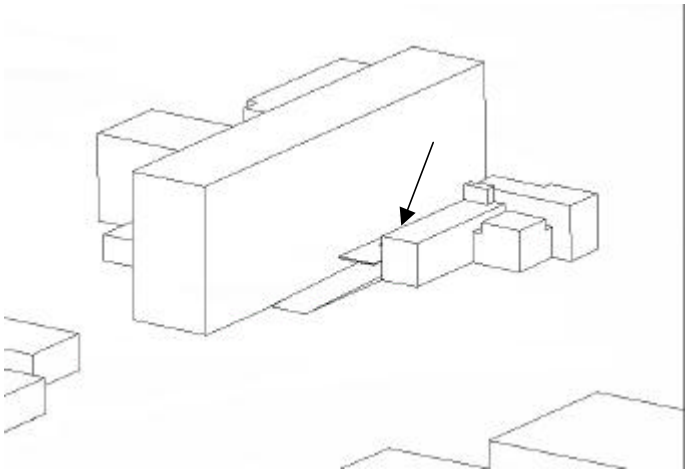

Figure 5a. The passage between the high-rise building 200D and the low-rise buildings (line drawing).

Figure 5b. The passage between the high-rise building 200D and the low-rise buildings.

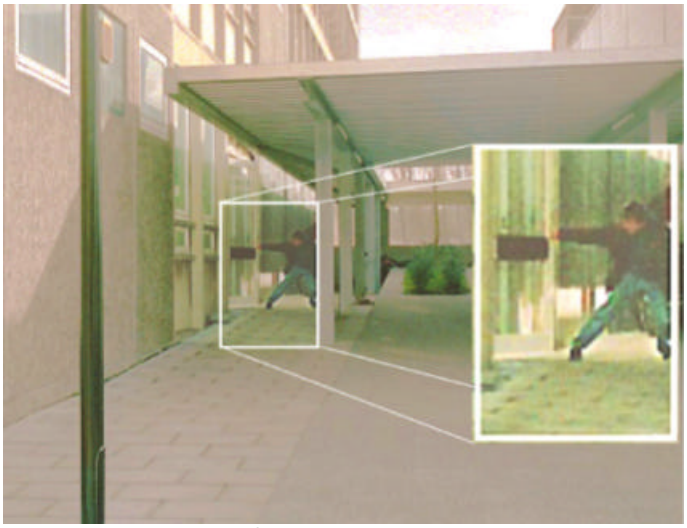

Figure 6. Illustration of wind nuisance in the passage between the buildings.

An example is now given to illustrate the problem of wind nuisance. Figure 4 is a perspective view of part of the university campus Arenberg of the KU-Leuven. We focus on the passage between the high-rise building 200D and its low-rise neighbouring building denoted as "Akoestiek" (Figs 4-5a, b). Building 200D is the highest building (30 m) in the neighbourhood. On windy days, high wind speeds are experienced in the passage by pedestrians trying to enter one of these buildings. Figure 6 illustrates the effort that a student must do to open the entrance door of building 200D. Unfortunately, the wind conditions at the time of the photograph are not exceptional ones, and pictures such as these can be taken often. Already several times, it has occurred that wind conditions caused the entrance door to slam so hard that the door glass shattered throughout the entrance hall. The current solution for this problem is the employment of technical staff on windy days to assist pedestrians in opening the door and to keep the door from slamming.

3 NUMERICAL STUDY: THE SILVERTOP TOWER PASSAGES

3.1 *Problem statement*

As indicated in the previous section, gaps or passages through buildings are common trouble spots. We now focus on wind conditions in the passages that are to be constructed through the Silvertop Towers. The Silvertop Towers are a group of three residential high-rise buildings located in the south of Antwerp. Built in 1960, the decline of the buildings and the neighbourhood has urged the housing department to initiate a comprehensive redevelopment project. Safety became a main issue: public safety by social control (through sight) should be increased by the new design. For this purpose, passages through each of the towers are designed (Figs. 7-8). The building entrances are situated in the passages. Hence, a favourable wind climate in the passages is imperative. The authors were asked to predict wind climate and, if needed, to suggest modifications restricted by the original design requirements. The complex configuration has led us to CFD modelling. Before going into this, first, the validity of the numerical model that will be used is briefly examined.

3.2 *Model and model validation*

The three-dimensional Reynolds Averaged Navier-Stokes equations and the continuity equation are solved using a commercial CFD code (Fluent 5.4). Closure is obtained by using the realizable k-ε model (Shih et al. 1995, Kim et al. 1997). Non-equilibrium wall functions are employed (Kim & Choudhury 1995). The equations are discretised using the control volume method. An unstructured, tetrahedral grid is preferred to allow modelling of complex geometrical configurations and reducing the number of control volumes by clustering cells in selected regions of the domain. The model is validated by comparison with wind tunnel experiments provided by Wiren (1975) who performed measurements in building passages with a hot-wire anemometer. The numerical simulation is performed at model scale to avoid the influence of scaling on the validation procedure. Width and height of the computational domain are equal to the wind tunnel dimensions (2.1 * 1.5 m²). Inflow parameters are taken equal to the wind tunnel values: power law inflow profile with an exponent of 0.125, turbulence intensity ranges from 14% at 10 mm height to 5% at 350 mm height. To obtain a suitable numerical grid and to examine the influence of geometrical

and calculation parameters, a sensitivity analysis has been performed. Among others, the effect of grid geometry, grid resolution and first order versus second order discretisation scheme has been examined. Details can be found in (Blocken et al. 2002). Figure 9 illustrates the model configuration. Figure 10 shows sensitivity study results and the comparison of experimental and numerical results.

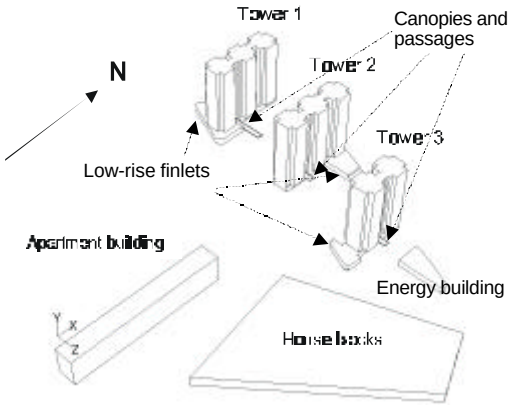

Figure 7. Perspective view of the site of the Silvertop Towers (proposed design with passages and canopies through the towers).

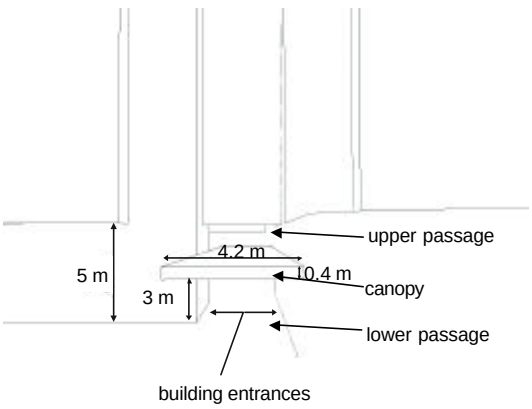

Figure 8. View from west at the passage through tower 1.

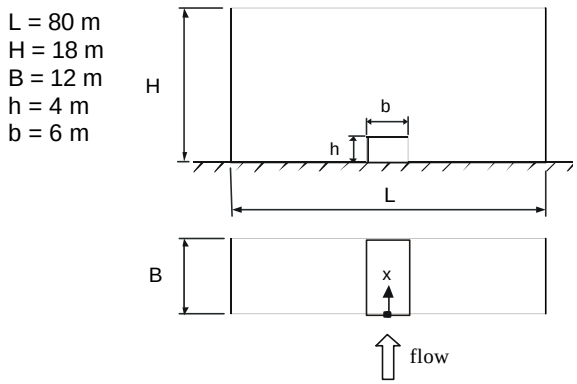

Figure 9. Building configuration for model validation. Full scale dimensions (drawing is not on scale) are indicated.

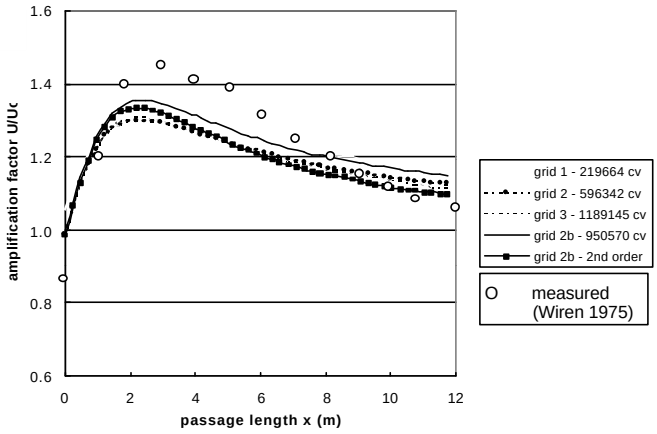

Figure 10. Measured (o) and calculated (-) wind amplification factor along the passage length.

Data are presented along the passage center line (x-axis in Fig. 9) at a height of 10 mm (2 m in full scale) and are given as a ratio U/U_0 (amplification factor) where U is the wind speed in the passage and U_0 is the wind speed at the same height in the undisturbed flow upstream of the model. Three grids (grid 1, 2, 3) with increasing grid resolution were used. As grid 2 yielded the same results as grid 3, the former was used for further study. Local grid refinement near the passage entrance yielded slightly improved results (grid 2b). In general, the comparison of numerical and experimental results indicates an underestimation of the peak value and an underestimation of the slope of the center line curve. The reason is numerical diffusion (caused by the truncation errors) in the simulation. Some reduction of this effect has been achieved by using a second order discretization scheme (grid 2b 2nd order). These results indicate the conditions for optimal performance and the accuracy that can be reached. The findings above will be used for the numerical simulation in the following sections.

3.3 *Description of buildings, site and terrain*

The Silvertop Towers are located in the south of Antwerp. From N (0°) to approximately S-W (240°) the site is surrounded by urban area for a distance of more than 5 kilometres. From S-W to N, fetch is over rural area for some tens of kilometres. Each tower is 60 m high and north-south oriented (Fig. 7). Towers 1 and 2 comprise three cross-shaped modules, tower 3 is made up of two modules. Each module has a maximum width and length of 20 m. South of the Towers, an apartment building (L * B * H = 122 * 15 * 22 m³) and a concentration of house blocks of about 8 m high are situated. A small building of 5 m height called the 'energy building' is situated east of tower three. Through-passages are constructed under each of the towers with building entrances in these passages (Fig. 8). A canopy divides each passage into two parts: the 'upper passage' and the 'lower passage'. The lower passage has dimensions L * B * H =

13.5 * 4.2 * 3 m³. The upper passage (6.5 * 4.2 * 1.6 m³) has no specific function in the design. Low-rise buildings of 5 m height – 'the finlets' - are constructed at the towers' base to house shops and the housing department offices.

3.4 *Numerical modelling of wind flow*

The model of Silvertop Towers, apartment building, blocks of houses, energy building and finlets is immersed in a boundary layer flow with a logarithmic inflow profile. Roughness length z_0 for the inflow is taken 0.25 m (rural area, wind directions 270° through 330°), 1 m (urban area, wind directions 30° through 210°), 0.5 m (transition from rural to urban, wind directions 0° and 240°) according to the updated Davenport roughness classification (Wieringa 1992). Local z_0 (level country, low vegetation, tarmac) is 0.03 m. Building roughness is taken 0.01 m. The dimensions of the computational domain are L * B * H = 900 * 700 * 190 m³. Grid geometry and grid resolution are based on the model validation (section 3.2), yielding an unstructured, tetrahedral grid with approximately 2.9 * 10^6 cells. The mesh on the west face of tower 1 is depicted in Figure 11. The second order discretisation scheme is used. The steady-state wind flow pattern is calculated for 12 wind directions (clockwise from north = 0° at 30° increments). The results are presented as an amplification factor U/U_0 where U is the local wind speed at pedestrian height (1.75 m) and U_0 is the reference wind speed at the same height (upstream undisturbed wind speed at the entrance of the domain). Figure 12 displays the rose of U/U_0 values in the passage of tower 1. Wind conditions are strongly dependent on wind direction. As an example, Figure 13a illustrates contours of wind amplification factor U/U_0 for wind direction 30° in a horizontal plane at 1.75 m height above ground. Figure 13b displays the corresponding static pressure contours. In these figures, the part of the towers above the lower passage is made transparent to reveal the quantities in the passage.

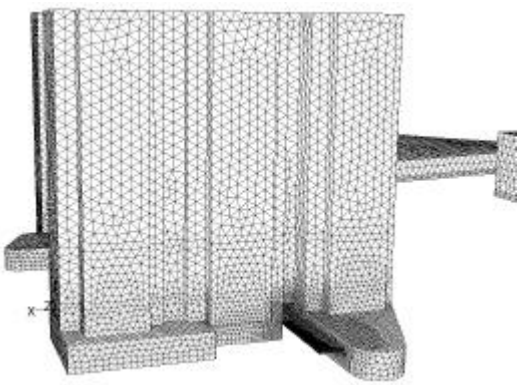

Figure 11. Mesh at the west face of tower 1 with local refinement near the passage entrance.

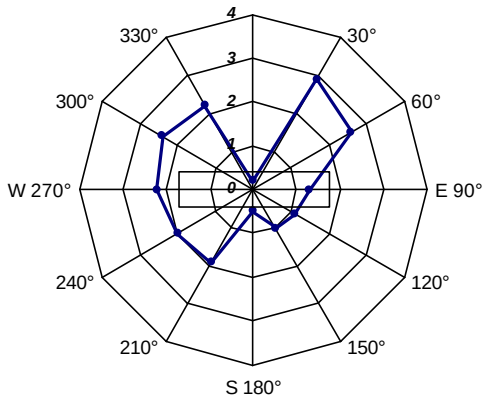

Figure 12. Rose with U/U_0 values for tower 1. The direction of the through-passage is indicated.

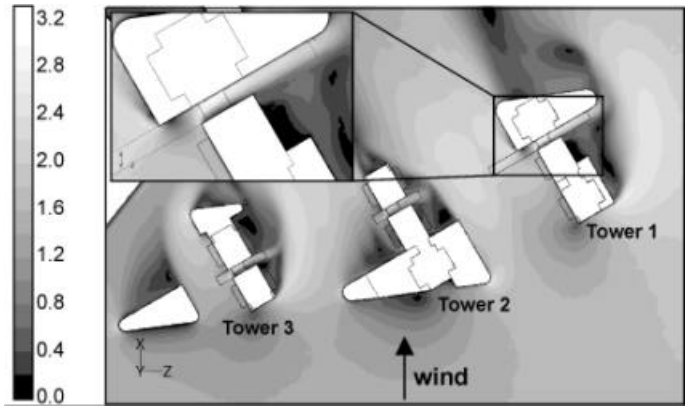

Figure 13a. Contours of wind amplification factor U/U_0 for wind direction 30° in a horizontal plane at 1.75 m height above ground (light shades indicate high wind amplification factor).

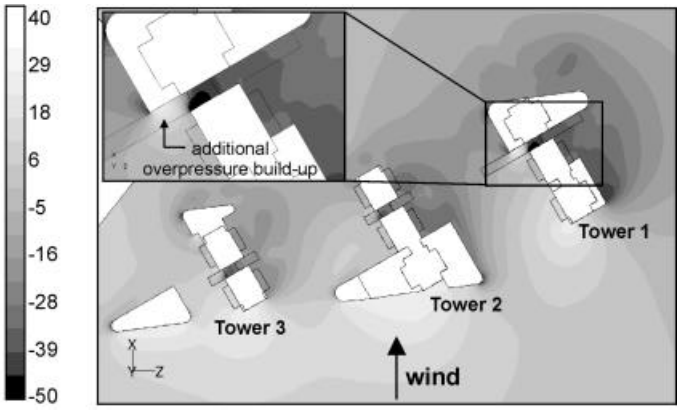

Figure 13b. Contours of static pressure (Pascal) for wind direction 30° in a horizontal plane at 1.75 m height above ground (light shades indicate high static pressure values).

Wind amplification factors for this wind direction are large, especially for tower 1 (light shades indicate high wind amplification factor or high static pressure).The reason is the configuration of canopy and low-rise building (finlet) that yield an additional overpressure build-up near the passage entrance of

tower 1 as shown in figure 13b (static pressure contours).

3.5 *Evaluation of wind climate*

3.5.1 *Method*

Three aspects are needed for the evaluation of local wind climate: (1) statistical meteorological information, (2) aerodynamic data and (3) a comfort criterion. Meteorological information comprises long term wind statistics from a nearby meteorological station in open terrain. Aerodynamic data is needed to link the meteorological information to the location of interest. This is done in two steps: First, local wind speed U and upstream undisturbed wind speed U_0 must be linked (this was done in section 3.4, ratio U/U_0). Next, U_0 must be linked to the wind speed at the meteorological station (U_{pot}). The procedure to link the wind speed at the meteorological station U_{pot} to the wind speed U_0 is not discussed herein. The reader is referred to (Bottema 1993, Blocken et al. 2002). Once both links are established providing us with the wind statistics at the location of interest, a comfort criterion is used to judge local wind climate.

Meteorological data: Hourly values of potential wind speed U_{pot} and wind direction from the Royal Dutch Meteorological Institute (KNMI) are used. The potential wind speed is the speed measured at 10 m height at an ideal meteorological station (z_0 = 0.03 m). The data of the station of Eindhoven are selected. It covers the period 1971 to 2000. Figure 14 illustrates wind climate at the station.

Comfort criterion: In the present study, the criterion selected by Bottema from an extensive comparison of different criteria (Bottema 1993, 2000) is used:

$$U + \sigma_u < 6 \text{ m/s} \quad ; \quad P_{max} = 15\% \qquad (1)$$

where U = hourly local wind speed at 1.75 m height; σ_u = standard deviation of the turbulent fluctuations (approximately 1 m/s, Blocken et al. 2002); 6 m/s = the discomfort threshold, P_{max} = maximum allowed exceedence probability for the threshold (15% for walking).

3.5.2 *Evaluation of wind climate*

By combining meteorological data, aerodynamic data and the comfort criterion, the relationship between the wind amplification factor U/U_0 and the discomfort probability P_θ for each wind direction θ can be derived (Fig. 15). The discomfort probability P_θ is the percentage of time that the discomfort threshold of 6 m/s (Eq. 1) is exceeded for wind direction θ. Using the values in Figure 12 as input for Figure 15, discomfort probabilities for each wind direction are determined and given in Table 1. South-westerly winds (210 – 240°) yield the largest contribution. In each passage, total discomfort probability (summed for all wind directions) is more than 40% considerably exceeding the allowed P_{max} = 15% (Eq. 1). It is necessary to significantly modify the wind climate.

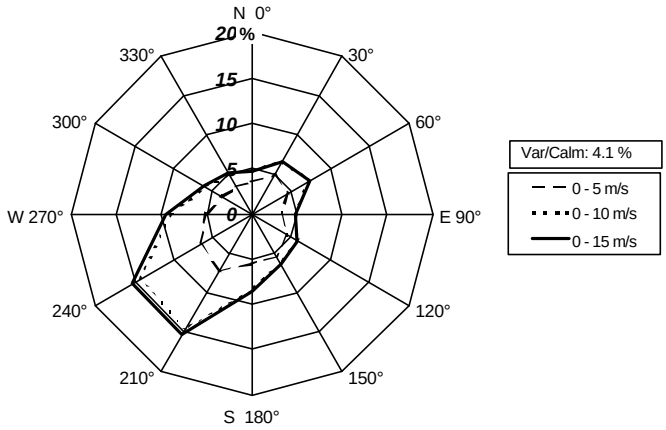

Figure 14. Wind climate at Eindhoven meteorological station, KNMI, 1971 – 2000. Percentage of occurrence of hourly wind speed.

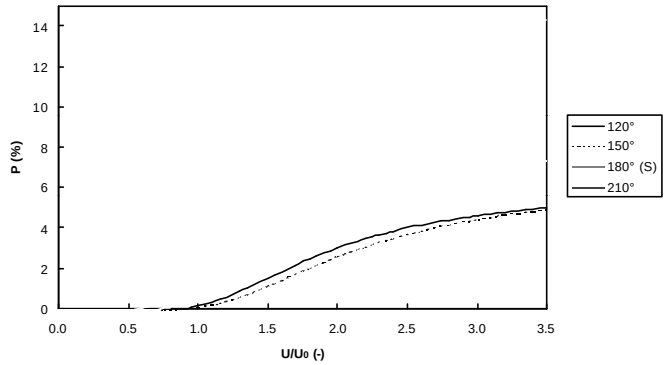

Figure 15. Discomfort probability P_θ (%) as a function of amplification factor U/U_0 for 4 wind directions.

Table 1: Discomfort probability in the passages

Wind direction	Discomfort time percentage		
	Tower 1 %	Tower 2 %	Tower 3 %
0°	0.0	0.0	0.0
30°	5.2	3.9	4.4
60°	5.9	5.4	5.2
90°	0.9	2.7	2.7
120°	0.3	4.0	2.8
150°	0.1	3.1	2.0
180°	0.0	0.6	0.0
210°	10.8	13.5	4.1
240°	11.5	13.0	11.5

270°	7.0	6.2	6.2
300°	4.4	1.9	2.5
330°	3.0	1.1	2.1
SUM	49.1	55.4	43.5

3.6 *Modification of wind climate*

Several options for the modification of wind climate in the passages were contemplated: (1) permanent closure of the passages, (2) elongation of the passages with tubes, (3) screens, (4) revolving doors or (5) sliding doors in the passages. The evaluation of each option is based on two criteria: (1) compatibility with the envisaged architectural design, (2) sufficient improvement of wind climate.

Permanent closure: The most straightforward solution is to permanently close the passages and to move the building entrances. This solution however conflicts with the essential design requirement (safety by social control in and near towers).

Tubes: The bad wind climate in the passages is caused by pressure short circuiting between wind and leeward side of the building. A possible solution is to decrease the pressure difference over the passage by extending it with airtight transparent tubes that end outside the over- and underpressure zones. However, the extent of these zones will give rise to long tubes with the risk of graffiti pollution and other acts of vandalism.

Screens: Instead of reducing the pressure difference one could consider increasing the flow resistance in the passage with screens. Wind tunnel studies of the effect of different screen configurations were carried out by Stichting Bouwresearch in the Netherlands (1982a, b). It was found that screens can significantly reduce wind speed in a passage, at the expense however of local strong wind velocities near the screens. Moreover, for a significant reduction of wind speed, screens should cover more than 50 – 75% of the passage section, which conflicts with fire safety requirements.

Revolving door: Placing a four-wing revolving door in the passage has the advantage of a comfortable wind environment without actually closing the passage. Among the disadvantages however are the poor compatibility with the architectural features of the envisaged design and the reduced transparency of the passage by the round shapes, again conflicting with the safety aspect of the passages.

Sliding doors: The solution that is finally decided upon is to install sliding doors at both ends of the lower passage. The geometry of the sliding doors (when opened) is given in Figure 16. During unfavourable wind conditions, a comfortable wind environment is ensured when at least one of both doors is closed. During favourable wind conditions, both doors can remain opened. A double control system is required: (1) an automatic control system that detects the occurrence of unfavourable wind conditions and closes or keeps closed at least one of the doors, (2) a manual control system that - during unfavourable wind conditions - allows pedestrians to open one of the doors while the other one remains closed. The second control can be taken similar to the well-known control system of elevator doors with momentary pushbuttons. The first control is more complex. The variable to be controlled is the wind speed in the lower passage. The variable to be measured by the sensor (anemometer) should be a wind speed value that is related to the wind speed in the lower passage.

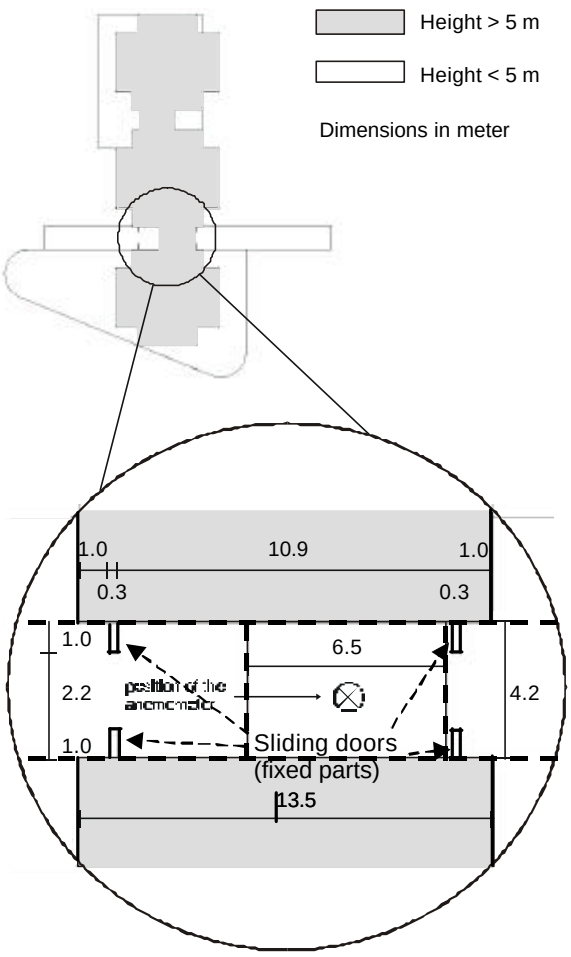

Figure 16. Cross-section through tower 1 with a horizontal plane at 1.75 m height indicating the fixed sliding door parts. Dimensions are given in meter.

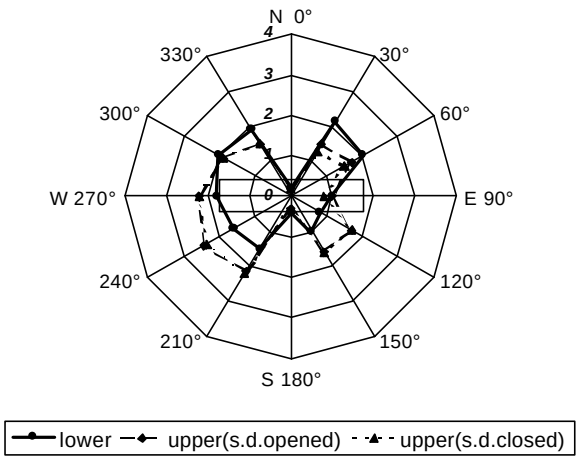

Figure 17. Wind amplification factor U/U_0 in the passages through tower 1 for: (1) lower passage, (2) upper passage with sliding doors opened, (3) upper passage with sliding doors closed. The direction of the through-passage is indicated.

The most straightforward choice is to place the anemometer in the upper passage, that is permanently opened and has no other function in the design (Fig. 8). The advantages of this choice are the limited distance between all control system components and the fact that the wind speed in the lower and in the upper passage are expected to show a satisfactory correspondence. The proposed open loop control system has the following basic components:

- controlled variable: wind speed in the lower passage
- controlled device: doors (open – closed)
- setpoint: threshold value for speed in lower passage
- measured variable: wind speed in the upper passage
- sensor: anemometer in the upper passage
- controller: digital software controller

The setpoint results from the comfort criterion (Eq. 1). The relationship between the controlled variable and the measured variable must be determined. Based on this relationship, the measured value and the setpoint value, the controller will take control action. The anemometer will be positioned at a location with low velocity gradients and stable flow: at 0.6 m above the canopy top face in the middle of the upper passage (indicated with a cross in Figure 16). We will now examine the relationship between wind speed in the lower and wind speed in the upper passage. The fixed parts of the sliding doors (Figure 16) in fact are screens in the passage and add flow resistance. As a result, wind climate will slightly improve even if the doors are always open. Wind amplification factors U/U_0 are calculated in the lower passage and in the upper passage (at the anemometer position) and the wind climate is numerically evaluated. The same is done for the configuration with closed doors (upper passage is open). Figure 17 illustrates the results for tower 1 with: (1) U/U_0 in the lower passage (maximum value after averaging over 1m²), (2) U/U_0 in the upper passage (at anemometer position - doors are opened), (3) U/U_0 in the upper passage (at anemometer position - doors are closed). Comparing Figure 17 with Figure 12 illustrates the effect of the fixed sliding door parts. Wind nuisance is decreased but uncomfortable conditions however still exist for up to 39%, 37% and 27% for towers 1, 2 and 3 respectively (Table 2). Figure 17 shows that the wind amplification factor in the upper passage of tower 1 is practically independent of the status of the doors. The same holds for tower 2 and 3. We will estimate the wind speed in the lower passage by measuring the upper passage wind speed and converting it with a single correction factor a that is independent of wind direction. A first choice for the correction factor is based on Figure 17 where the difference in wind amplification factor U/U_0 between upper and lower passage is minimised using the weighted least square method (WLSM):

$$\sum_{\theta} A(\theta)\left[a\left(\frac{U}{U_0}\right)_{upper} - \left(\frac{U}{U_0}\right)_{lower}\right]^2 \qquad (2)$$

where $A(\theta)$ = probability for wind direction θ; a = correction factor; $(U/U_0)_{upper}$ = wind amplification factor in the upper passage; $(U/U_0)_{lower}$ = wind amplification factor in the lower passage. This yields the following correction factors: (index i denotes tower number): $a_1 = 0.81$; $a_2 = 0.88$; $a_3 = 0.76$. Multiplying the measured value with these correction factors will sometimes yield an underestimation, sometimes an overestimation of the wind speed in the lower passage. E.g. for 30° in the passage of tower 1, the wind speed in the lower passage will be underestimated (Figure 17). Subsequently, doors will be open instead of closed for a certain percentage of time. In this period, the discomfort threshold is exceeded (Eq. 1). The opposite holds for an overestimation. Table 3 yields door status time percentages for four different cases or sets of corrections factors. The calculation was performed using Weibull functions (Blocken et al. 2002) and assuming an instantaneous control system (no deadtime). Case 1 implies a “perfect” control system: correction factors are perfect and deadtime is zero. Deadtime is the time between a change in lower passage wind speed and when the control system responds. In this case, the percentage of time that the doors are closed equals the discomfort probability (see Table 2). The next cases use a single (wind independent) correction factor a. Case 2 employs the WLSM correction factors given above. In case 3, correction factors have been adapted to yield a zero discomfort threshold exceedence. However, the fraction of time that doors are closed instead of open is rather large.

Table 2: Discomfort probability in the through-passages (configuration with sliding doors opened)

Wind direction	Discomfort time percentage		
	Tower 1 %	Tower 2 %	Tower 3 %
0°	0.0	0.0	0.0
30°	3.9	2.0	2.7
60°	4.7	4.1	3.3
90°	0.2	1.5	2.3
120°	0.0	2.2	1.5
150°	0.1	1.7	0.8
180°	0.0	0.0	0.0
210°	8.2	11.3	2.9
240°	9.4	10.6	8.7
270°	5.8	2.9	2.9
300°	3.8	0.2	0.8
330°	2.5	0.2	1.1
SUM	38.6	36.7	27.0

Finally, case 4 is selected, which is a slight modification of case 2, decreasing the discomfort threshold exceedence value to about 5%, which is well below the maximum allowed value P_{max} = 15%. Note that for each set of correction factors, the result of "time closed" minus "time closed instead of opened" plus "time opened instead of closed" yields the same value. The values in Table 3 imply an instantaneous control, which is practically impossible. In reality, the control will always lag behind. We select an anemometer measuring and a control decision time interval of 10 minutes (which means closing or opening the doors dependent on the wind speed measurement during the past 10 minutes). In the worst case, we will face a deadtime of 10 minutes. However, since wind speed is known to be approximately stationary in periods from 10 minutes to an hour (Van der Hoven 1957), deadtime will be limited.

Table 3: Sliding door control system. Percentage of time that doors are closed, closed instead of opened and vice versa for 4 cases (different correction factors). Percentage 'closed' comprises percentage 'closed instead of opened'

Correction factor a and status of doors	Tower 1 % time	Tower 2 % time	Tower 3 % time
a (wind direction dependent)	(*)	(*)	(*)
closed	38.6	36.7	27.0
closed instead of open	0.0	0.0	0.0
open instead of closed **	0.0	0.0	0.0
a (WLSM)	0.81	0.88	0.76
closed	35.1	36.5	27.5
closed instead of open	5.0	3.3	4.3
open instead of closed **	8.5	3.5	3.8
a (zero disc. threshold exceedence)	1.39	1.05	1.05
closed	60.8	46.6	47.3
closed instead of open	22.2	9.9	20.4
open instead of closed **	0.0	0.0	0.0
a (WLSM adapted)	0.95	0.88	0.76
closed	43.4	36.5	27.5
closed instead of open	10	3.3	4.3
open instead of closed **	5.2	3.5	3.8

* values of a are wind direction dependent
** the percentage "open instead of closed" equals the % exceedence of the discomfort threshold for this set of correction factors a.

4 CONCLUSIONS

Wind climate in the designed Silvertop Tower passages was numerically evaluated and judged to be unacceptable. Different solutions have been suggested, most of which conflicted with the envisaged architectural design. A rather unconventional solution was finally selected, with sliding doors at both ends of the passage that are controlled based on local wind climate.

Errors in the numerical calculation are inevitable. Attention has been paid to ascertain and to limit error sources. A limited model validation has been performed, from which some simulation guidelines have been extracted, such as the choice of a suitable grid and the use of the second order discretization scheme.

The influence of remaining errors on the performance of the proposed control system is expected to be limited, as only errors in the correction factors (relative errors, i.e. between U/U_0 in the upper and U/U_0 in the lower passage) are important. Time estimates however (time open instead of closed, closed instead of open) are based on absolute U/U_0 values and are more susceptible to errors.

5 ACKNOWLEDGEMENT

This research is funded by the government of Flanders. As a Flemish government institution, IWT (= Institute for the Promotion of Innovation by Science and Technology in Flanders; Instituut voor de aanmoediging van Innovatie door Wetenschap en Technologie in Vlaanderen) supports and stimulates industrial research and technology transfer in the Flemish industry. Their contribution is gratefully acknowledged.

REFERENCES

Baskaran, A. & Kashef, A. 1996. Investigation of air flow around buildings using computational fluid dynamics techniques. *Engineering Structures* 18 (11): 861-875.

Blocken, B., Roels, S. & Carmeliet, J. 2002. Evaluation and modification of pedestrian wind environment in the Silvertop Tower passages. In preparation.

Bottema, M., Eggels, J.G.M. & Wisse, J.A. 1991. Numerical simulation of wind in a built-up environment and experimental verification. *Journal of Wind Engineering and Industrial Aerodynamics* 38: 141-149.

Bottema, M. 1993. *Wind climate and urban geometry*. Ph.D. thesis. FAGO. Technical University of Eindhoven.

Bottema, M. 2000. Optimisation of wind discomfort criteria. *Building and Environment* 35: 1-18.

Durgin, F.H. & Chock, A.W. 1982. Pedestrian wind levels: a brief review. *Journal Structural Division ASCE* 108 (ST8), 1751-1767.

Gandemer, J. 1975. Wind environment around buildings: aerodynamic concepts. *Proceedings of the 4th International Conference on Wind Effects on Buildings and Structures:* 423-432, Heathrow 1975.

He, J. & Song, C.C.S. 1999. Evaluation of pedestrian winds in urban area by numerical approach. *Journal of Wind Engineering and Industrial Aerodynamics* 81: 295-309.

Hirsch, C., Bouffioux, V. & Wilquem, F. 2002. CFD simulation of the impact of new buildings on wind comfort in an urban area. *Workshop proceedings, Cost Action C14, Impact of Wind and Storm on City Life and Built Environment*: 164-171, Nantes, France, June 3-4, 2002.

Kim, S-E. & Choudhury, D. 1995. A near-wall treatment using wall functions sensitised to pressure gradient. *Fluids Engineering Division - ASME*: 217 (Separated and Complex Flows).

Kim, S.-E. , Choudhury, D. & Patel, B. 1997. Computations of complex turbulent flows using the commercial code FLUENT. *Proceedings of the ICASE/LaRC/AFOSR Symposium on Modeling Complex Turbulent Flows*, Hampton, Virginia.

Melbourne, W.H. & Joubert, P.N. 1971. Problems of wind flow at the base of tall buildings. *Proceedings 3rd International Conference on Buildings and Structures*: 105-114,Tokyo.

Panneer Selvam, R. 1996. Computation of flow around Texas Tech building using k-ε and Kato-Launder k-ε turbulence model. *Engineering Structures* 18 (11): 856-860.

Shih, T-H., Liou, W.W., Shabbir, A. & Zhu, J. 1995. A new k-e eddy-viscosity model for high Reynolds number turbulent flows – model development and validation. *Computers and Fluids* 24 (3): 227-238.

Stathopoulos, T. & Storms, R. 1986. Wind environmental conditions in passages between buildings. *Journal of Wind Engineering and Industrial Aerodynamics* 24: 19-31.

Stathopoulos, T. & Baskaran, B.A. 1996. Computer simulation of wind environmental conditions around buildings. *Engineering Structures* 18 (11): 876-885.

Stichting Bouwresearch. 1979. *Beperken van windhinder om gebouwen, deel 1. (in Dutch).* SBR 65. Kluwer Technische Boeken.

Stichting Bouwresearch. 1979. *Beperken van windhinder om gebouwen, fotobijlage bij deel 1.* (in Dutch). SBR 65. Kluwer Technische Boeken.

Stichting Bouwresearch. 1982a. *Beperken van windhinder om gebouwen, deel 2*. (in Dutch). SBR 90. Kluwer Technische Boeken.

Stichting Bouwresearch. 1982b. *Beperken van windhinder om gebouwen, fotobijlage bij deel 2*. (in Dutch). SBR 90. Kluwer Technische Boeken.

Van der Hoven, I. 1957. Power spectrum of horizontal wind speed in the frequency range from 0.0007 to 900 cycles per hour. *Journal of Meteorology* 14 : 160-164.

Westbury, P.S., Miles, S.D. & Stathopoulos, T. 2002. CFD application on the evaluation of pedestrian-level winds. *Workshop proceedings, Cost Action C14, Impact of Wind and Storm on City Life and Built Environment*: 164-171, Nantes, France, June 3-4, 2002.

Wieringa, J. 1992. Updating the Davenport roughness classification. *Journal of Wind Engineering and Industrial Aerodynamics* 41-44: 357-368.

Wiren, B.G. 1975. A wind tunnel study of wind velocities in passages between and through buildings. *Proceedings of the 4th International Conference on Wind Effects on Buildings and Structures*: 465-475, Heathrow 1975.

Wise, A.F.E. 1970. Wind effects due to groups of buildings. *Proceedings of the Royal Society Symposium Architectural Aerodynamics*, London, February 26-27, 1970.

Wisse, J.A., Krüs, H.W. & Willemsen, E. 2002. Wind comfort assessment by CFD – context and requirements. *Workshop proceedings, Cost Action C14, Impact of Wind and Storm on City Life and Built Environment*: 154-163, Nantes, France, June 3-4, 2002.