Pure competence in air.

SCHAKO

QUICK

The quick selection guide

Table of contents

Index by product name

Index by product name

Index by product name

Index by product name

Ceiling air diffusers, particle filter boxes and filter diffusers

DQJ - Ceiling swirl diffuser

Properties

- Suitable for variable volumetric flow.
- Ceiling swirl diffuser with high induction.
- The air flow can be channeled in all directions without changing the pressure loss and the noise level.
- All sizes possible with a reduced drill pattern.
- Also available with flat plate (3 mm) - DJ-S version.
- Great flexibility with plenum boxes and connection spigot (height of box, number of spigots, spigot diameter).
- Blades: standard black plastic RAL 9005 or white plastic RAL 9010. Optional: painted, non-adjustable aluminium blades.
- Certified according to ATEX Directive 2014/34/EU.

Quick selection

DQJ-Q-SR/DQJ-R-SR
Assumptions: installation height 2.8 m - with Coanda effect - ΔT cooling = 10 K

								Return air (without blades)	
Size	L_{WA} [dB(A)]	V_{Sup} (m³/h)	Δp_t (Pa)	x_{Kr} (m)	v_{mean} (m/s)	I	TV	V_{return} (m³/h)	Δp_t (Pa)
310	40	271	45	2	0.11	50.3	0.05	528	35
	35	226	31	1.7	0.11	42.6	0.06	441	24
	30	189	21	1.4	0.10	38.9	0.06	368	17
400	40	320	48	1.8	0.10	54.6	0.04	601	31
	35	264	32	1.5	0.10	46.3	0.05	494	21
	30	218	22	1.3	0.09	42.2	0.06	406	14
500	40	542	32	1.9	0.10	37.8	0.06	927	28
	35	446	21	1.6	0.10	32.1	0.07	764	19
	30	367	14	1.3	0.09	29.3	0.08	630	13
600/625	40	815	37	2.1	0.16	29.2	0.08	1527	37
	35	671	25	1.7	0.15	24.8	0.1	1298	26
	30	553	17	1.4	0.14	22.6	0.1	1104	18
800	40	1204	28	2.1	0.15	21.5	0.11	1855	20
	35	993	19	1.8	0.15	18.2	0.13	1609	13
	30	819	13	1.5	0.13	16.6	0.14	1396	9

DQJ-Q-SQ
Assumptions: installation height 2.8 m - with Coanda effect - ΔT cooling = 10 K

								Return air (without blades)	
Size	L_{WA} [dB(A)]	V_{Sup} (m³/h)	Δp_t (Pa)	x_{Kr} (m)	v_{mean} (m/s)	I	TV	V_{return} (m³/h)	Δp_t (Pa)
310	40	296	46	2	0.12	47	0.04	562	31
	35	245	31	1.7	0.12	39.4	0.05	463	21
	30	202	21	1.4	0.10	35.7	0.06	381	15
400	40	354	50	1.8	0.12	48.4	0.04	606	30
	35	291	34	1.5	0.12	40.6	0.05	492	20
	30	240	23	1.2	0.10	36.7	0.06	399	14
500	40	638	28	1.9	0.11	31.2	0.07	999	16
	35	532	19	1.6	0.11	26.1	0.08	813	10
	30	445	14	1.4	0.10	23.7	0.09	661	7
600/625	40	901	38	2	0.15	24.5	0.08	1647	34
	35	740	26	1.7	0.15	20.5	0.1	1381	23
	30	609	17	1.4	0.13	18.6	0.11	1158	16
800	40	1455	29	2.1	0.15	16.4	0.12	2074	16
	35	1196	20	1.8	0.16	13.8	0.15	1750	11
	30	983	13	1.5	0.15	12.5	0.16	1477	8

DQJ - Ceiling swirl diffuser

Dimensions for DQJ-Q

DQJ-Q-SR-Z-... / DQJ-Q-SR-Z-...-PS-... / DQJ-Q-SQ-Z-..., with SK-Q-01-Z-... (for supply air)

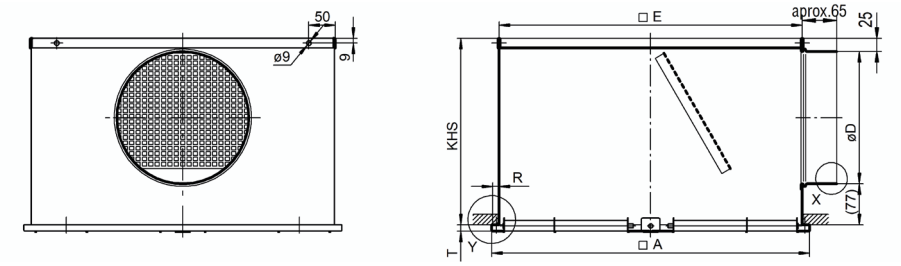

DQJ-S-SR-Z-... / DQJ-S-SR-Z-...-PS-... / DQJ-S-SQ-Z-..., with SK-Q-01-Z-... (for supply air) (not possible for NW 800)

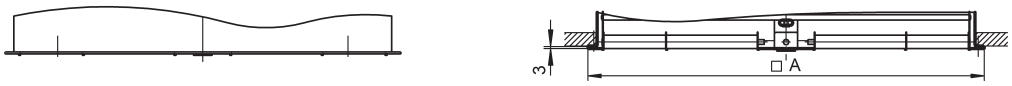

DQJ-Q-SR-A-.. / DQJ-Q-SQ-A-..., with SK-Q-01-A-... (for return air)

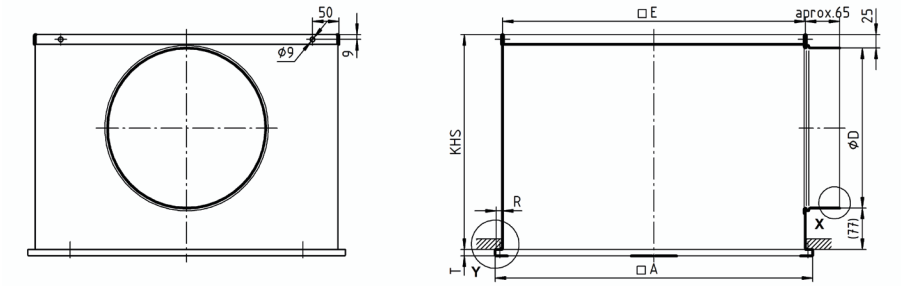

DQJ-S-SR-A-.. / DQJ-S-SQ-A-..., with SK-Q-01-A-... (for return air) (not possible for NW 800)

Available sizes for DQJ-Q

NW	□A	□E	R	T	SK-Q-01-Z-...		SK-Q-01-A-...		$ØD_{max}$ for ...-S5
					KHS	ØD	KHS	ØD	
310	308	290	8	7	260	158	300	198	98
400	398	370	12	12	260	158	300	198	138
500	498	470	12	12	300	198	350	248	198
600	598	570	12	12	350	248	400	298	248
625	623	570	24	12	350	248	400	298	248
800	798	770	12	12	455	353	455	353	353

DQJ - Ceiling swirl diffuser

Dimensions DQJ-R

DQJ-R-SR-Z-... / DQJ-R-SR-Z-...-PS-..., with SK-R-01-Z-... (for supply air)

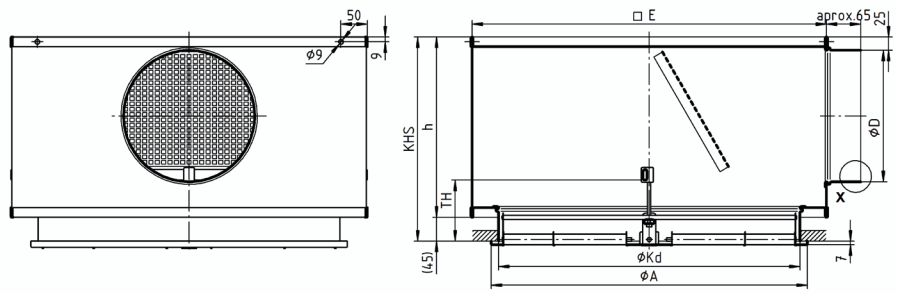

DQJ-R-SR-A-..., with SK-R-01-A-... (for return air)

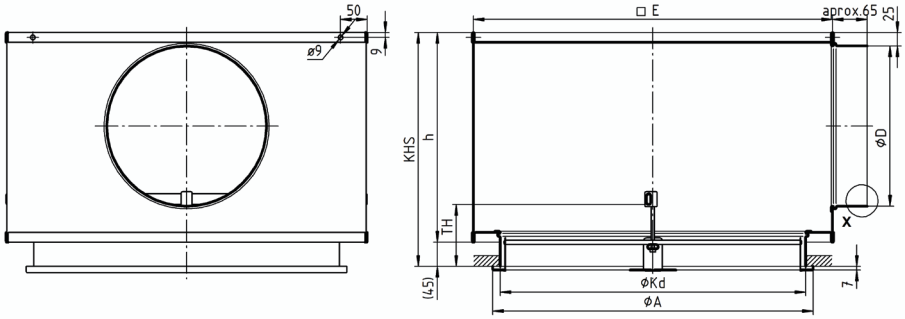

Available sizes for DQJ-R

NW	□A	□E	ØKd	TH	SK-R-01-Z-...			SK-R-01-A-...			$ØD_{max}$ for ...-S5
					KHS	h	ØD	KHS	h	ØD	
310	310	405	298	115	295	250	158	335	290	198	158
400	400	445	370	115	295	250	158	335	290	198	178
500	500	545	470	115	335	290	198	385	340	248	198
600	600	670	570	115	385	340	248	435	390	298	298
625	625	670	570	115	385	340	248	435	390	298	298
800	800	845	770	115	490	445	353	490	445	353	353

Spigot position

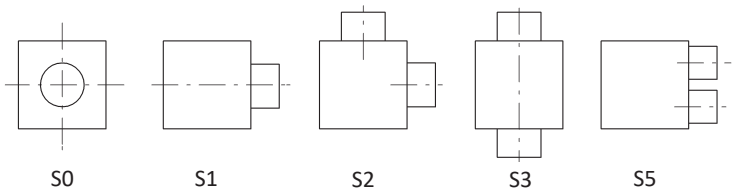

4DE - Ceiling diffuser

Properties

- Air throw pattern on four sides, individually adjustable blades.
- Use up to a Δ-temperature of 14 K.
- Ceiling diffuser with high induction.
- Suitable for variable volumetric flow.
- Free cross-section, resistance and sound power level constant in all blade positions.
- Large selection of plenum boxes/number of connection spigots.

Quick selection

Assumptions: installation height 2.8 m - with Coanda effect - ΔT cooling = 10 K

								Return air (without blades)	
Size	L_{WA} [dB(A)]	V_{Sup} (m³/h)	Δp_t (Pa)	x_{Kr} (m)	v_{mean} (m/s)	I	TV	V_{return} (m³/h)	Δp_t (Pa)
310	40	258	40	1.4	0.3	16.2	0.06	388	42
	35	213	28	1.2	0.265	13.2	0.08	319	28
	30	176	19	1	0.23	11.4	0.09	262	19
400	40	369	39	1.5	0.265	13.7	0.07	535	46
	35	301	26	1.2	0.23	11.2	0.09	434	30
	30	246	17	1	0.2	9.6	0.11	352	20
500	40	681	35	2.3	0.28	19.4	0.05	1001	30
	35	557	24	1.9	0.245	15.8	0.06	832	21
	30	456	16	1.6	0.21	13.4	0.08	690	14
600/625	40	863	38	2.2	0.245	17.2	0.06	1117	28
	35	714	26	1.9	0.215	14.1	0.07	921	19
	30	591	18	1.6	0.19	11.9	0.08	760	13
800	40	1517	32	2.4	0.29	14.2	0.07	1676	27
	35	1256	22	2	0.255	11.6	0.08	1394	18
	30	1041	15	1.7	0.23	9.8	0.1	1159	13

Dimensions

4DE-Z with SK-Q-06-Z-... (for supply air)

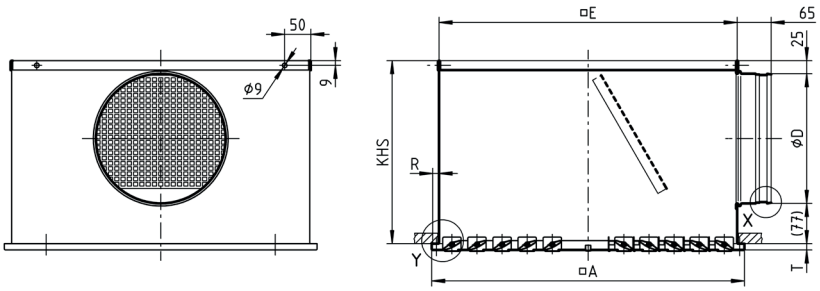

4DE-A with SK-Q-06-A-... (for return air)

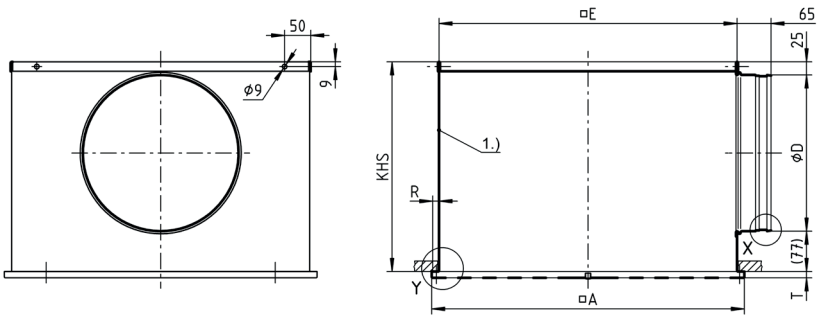

4DE - Ceiling diffuser

Available sizes

NW	□A	□E	R	T	SK-Q-06-Z-...		SK-Q-06-A-...		$ØD_{max}$ for ...-S5
					KHS	ØD	KHS	ØD	
310	308	290	8	7	260	158	300	198	98
400	398	370	12	12	260	158	300	198	138
500	498	470	12	12	300	198	350	248	198
600	598	570	12	12	350	248	400	298	248
625	623	570	24	12	350	248	400	298	248
800	798	770	12	12	455	353	455	353	353

KHS = standard height of box
Special height of box = øD + 102 mm but at least 200 mm.
Note: for SK-Q-06-Z-...-DK1/-DK2-...-S0, the height of the box changes to KHS = 280 mm for NW 310 and NW 400.

Spigot position

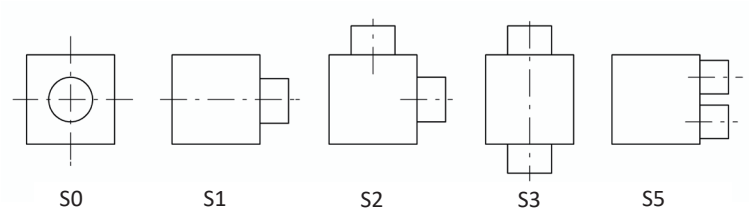

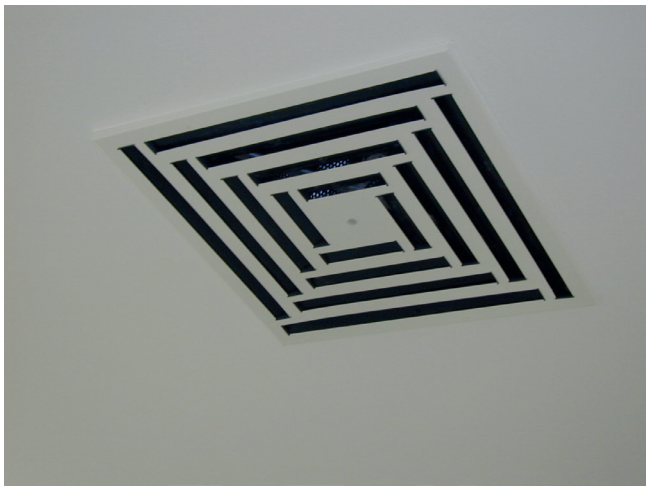

4DF - Ceiling diffuser

Properties

- Air throw pattern on four sides, fixed air guide sheets.
- Large selection of plenum boxes/number of connection spigots.
- Four-sided diffuser with Coanda effect.
- Certified according to ATEX Directive 2014/34/EU.

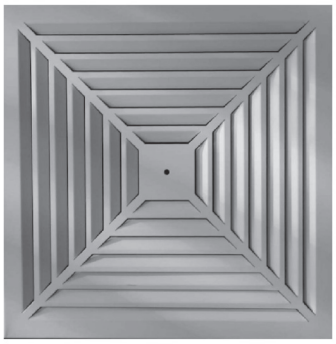

Quick selection

Assumptions: installation height 2.8 m - with Coanda effect - ΔT cooling = 10 K

								Return air	
Size	L_{WA} [dB(A)]	V_{Sup} (m³/h)	Δp_t (Pa)	x_{Kr} (m)	v_{mean} (m/s)	I	TV	V_{return} (m³/h)	Δp_t (Pa)
400	40	417	38	1.9	0.27	15.8	0.06	502	10
	35	366	29	1.3	0.315	10.8	0.09	422	7
	30	321	22	1	0.26	12.2	0.08	355	5
500	40	615	52	2	0.27	12.5	0.08	726	12
	35	520	37	1.6	0.22	10.2	0.09	631	9
	30	439	27	1.3	0.165	9.6	0.1	548	7
600/625	40	966	35	2.4	0.23	12.3	0.08	1007	10
	35	830	26	1.9	0.215	9.8	0.1	745	7
	30	713	19	1.4	0.195	7.9	0.12	709	5

Dimensions

4DF with SK-Q-07-Z-... (for supply air, with concealed mounting)

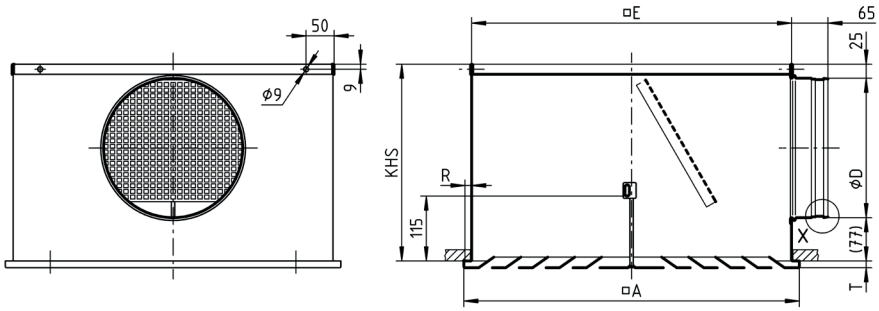

4DF with SK-Q-07-A-... (for return air, with concealed mounting)

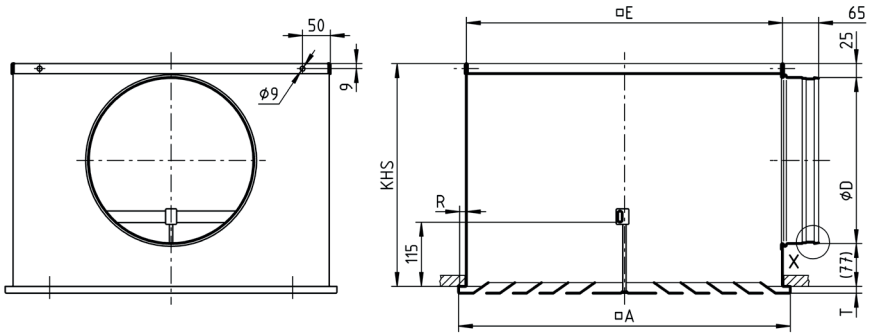

4DF - Ceiling diffuser

Available sizes

NW	□A	□E	R	SK-Q-07-Z-...		SK-Q-07-A-...		T	$ØD_{max}$ for ...-S5
				KHS	ØD	KHS	ØD		
310	308	290	8	260	158	300	198	7	98
400	398	370	12	260	158	300	198	12	138
500	498	470	12	300	198	350	248	12	198
600	598	570	12	350	248	400	298	12	248
625	623	570	24	350	248	400	298	12	248

KHS = standard height of box
Special height of box = øD + 102 mm but at least 200 mm.
Note: for SK-Q-07-Z-...-DK1/-DK2-...-S0, the height of the box changes to KHS = 280 mm for NW 310 and NW 400.

Spigot position

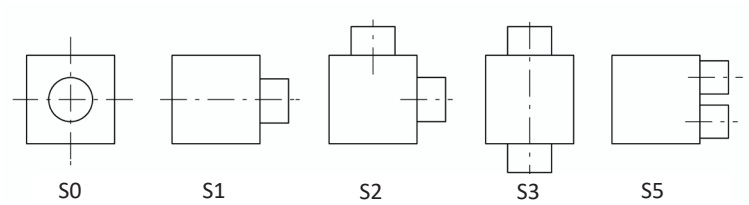

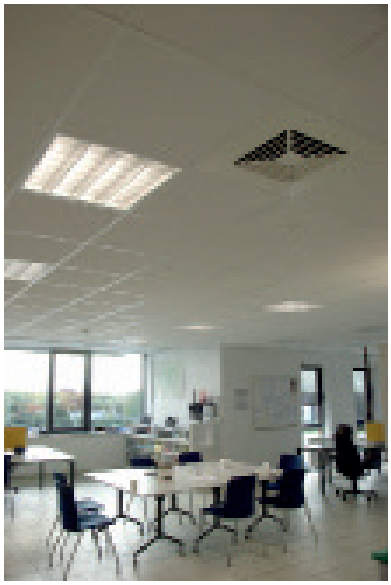

DO - Ceiling swirl diffuser

Properties

- Ceiling mount up to 4 m installation height.
- Swirl diffuser with fixed air guide sheets.
- RAL colour 9010.
- **DO-Q-SR-F:** square faceplate.
- **DO-R-SR-F:** round faceplate.

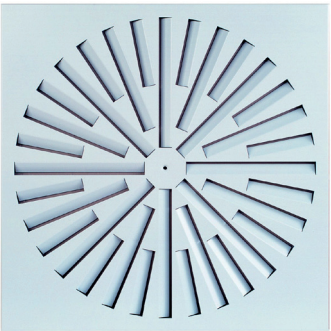

Quick selection

DO-SR-F

Assumptions: installation height 3 m - with Coanda effect - ΔT cooling = 10 K

								Return air	
Size	L_{WA} [dB(A)]	V_{Sup} (m^3/h)	Δp_t (Pa)	x_{Kr} (m)	v_{mean} (m/s)	I	TV	V_{return} (m^3/h)	Δp_t (Pa)
310	40	271	45	1.6	0.12	21.1	0.1	528	35
	35	226	31	1.4	0.12	18.7	0.1	441	24
	30	189	21	1.2	0.11	16.3	0.2	368	17
400	40	320	48	1.6	0.15	18.3	0.1	601	31
	35	264	32	1.4	0.14	16.3	0.2	494	21
	30	218	22	1.1	0.14	14.2	0.2	406	14
500	40	542	32	1.7	0.15	12.7	0.2	927	28
	35	446	21	1.4	0.14	11.3	0.2	764	19
	30	367	14	1.2	0.13	9.8	0.3	630	13
600/625	40	815	37	1.9	0.26	9.8	0.3	1527	37
	35	671	25	1.6	0.24	8.7	0.3	1298	26
	30	553	17	1.3	0.23	7.6	0.3	1104	18

Dimensions

DO-Q-... / DO-R-... with SK-R-10-Z-... (for supply air, with concealed mounting)

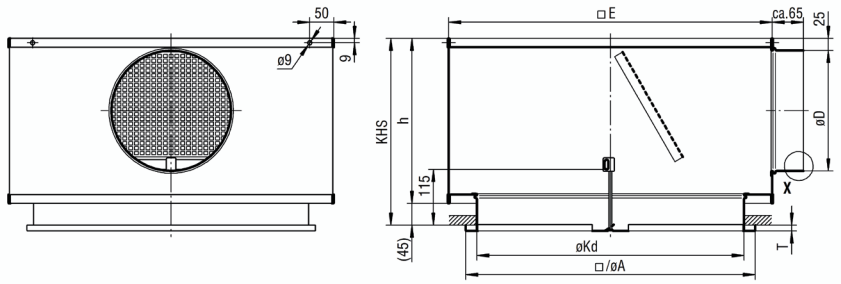

DO-Q-... / DO-R-... mit SK-R-10-A-... (for return air, with concealed mounting)

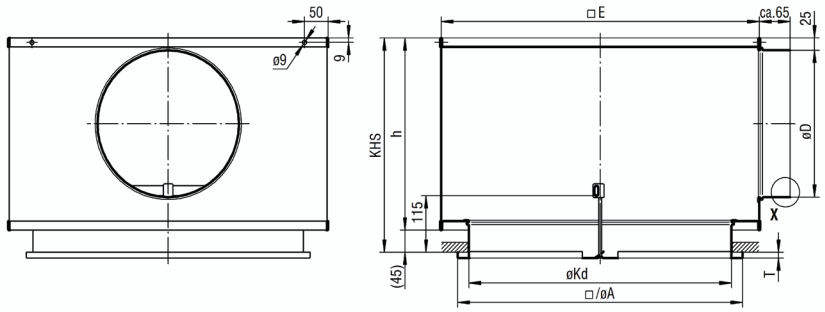

DO = Ceiling swirl diffuser

Available sizes

NW	DO-Q-...		DO-R-...		SK-R-10-Z-...					SK-R-10-A-...					$ØD_{max}$ for ...-S5
	□A	T	ØA	T	□E	ØKd	KHS	h	ØD	□E	ØKd	KHS	h	ØD	
310	308	7	30	7	405	283	295	250	158	405	283	335	290	198	158
400	398	12	400	7	445	353	295	250	158	445	353	335	290	198	178
500	498	12	500	7	545	453	335	290	198	545	453	385	340	248	198
600	598	12	600	7	670	553	385	340	248	670	553	435	390	298	298
625	623	12	625	7	670	553	385	340	248	670	553	435	390	298	298

KHS = standard height of box
Special height of box = øD + 137 mm but at least 235 mm.
Note: for SK-R-10-Z-...-DK1/-DK2-...-S0, the height of the box changes to h=280 mm for NW 310 and NW 400 and to h = 300 mm for NW 500.

Spigot position

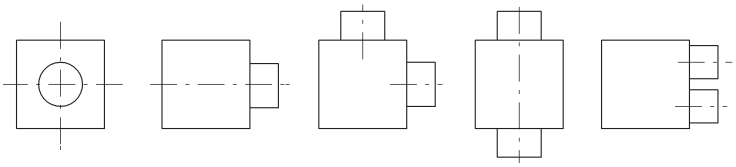

S0 S1 S2 S3 S5

DQF - Swirl diffuser

Properties

- Ceiling mount up to 4 m installation height.
- Diffuser with fixed air guide sheets.
- **DQF-Q:** square faceplate.
- **DQF-R:** round faceplate**.**

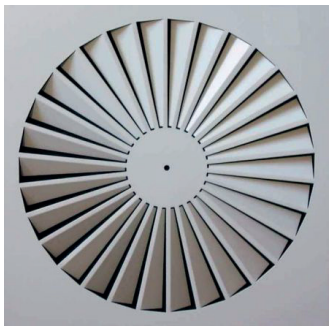

Quick selection

Assumptions: installation height 3 m - with Coanda effect - ΔT cooling = 10 K

								Return air	
Size	L_{WA} [dB(A)]	V_{Sup} (m³/h)	Δp_t (Pa)	x_{Kr} (m)	v_{mean} (m/s)	I	TV	V_{return} (m³/h)	Δp_t (Pa)
310	40	151	24	1.6	0.15	33.1	0.03	167	26
	35	121	16	1.2	0.13	33.1	0.03	136	18
	30	96	10	1.1	0.10	37.3	0.03	112	12
400	40	308	25	1.5	0.10	24.3	0.04	435	24
	35	258	17	1.3	0.08	24.3	0.04	375	18
	30	216	12	1.1	0.06	27.4	0.04	324	13
500	40	520	27	1.8	0.15	18.5	0.05	665	23
	35	440	20	1.5	0.13	18.5	0.05	562	16
	30	372	14	1.3	0.10	20.9	0.05	476	12
600/625	40	813	27	2.1	0.17	14.8	0.07	1148	19
	35	702	20	1.9	0.14	14.8	0.07	960	13
	30	606	15	1.7	0.11	16.7	0.06	803	9

Dimensions

DQF-...-Z-... with SK-R-11-Z-... (for supply air, with concealed mounting)

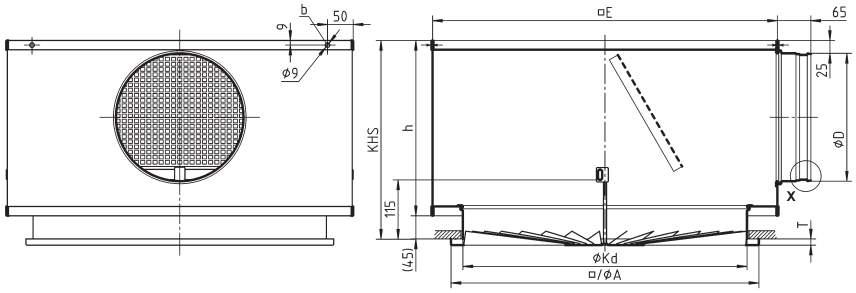

DQF-...-A-... with SK-R-11-A-... (for return air, with concealed mounting)

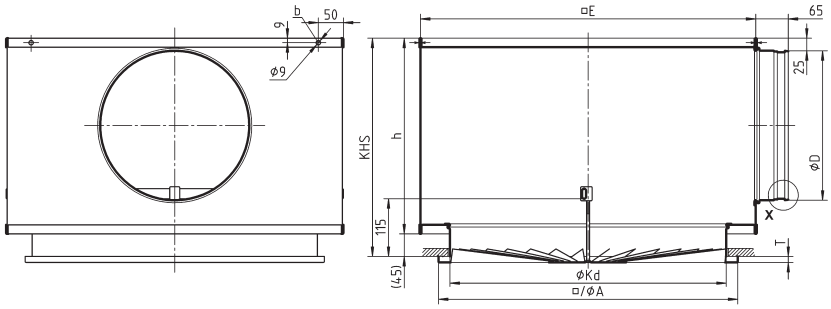

b = suspension on-site

DQF - Swirl diffuser

Available sizes

NW	DQF-Q-...		DQF-R-...		SK-R-11-Z-... (supply air)					SK-R-11-A-... (return air)					$ØD_{max}$ for ...-S5
	□A	T	ØA	T	□E	ØKd	KHS	h	ØD	□E	ØKd	KHS	h	ØD	
310	308	7	30	7	405	283	295	250	158	405	283	335	290	198	158
400	398	12	400	7	445	353	295	250	158	445	353	335	290	198	178
500	498	12	500	7	545	453	335	290	198	545	453	385	340	248	198
600	598	12	600	7	670	553	385	340	248	670	553	435	390	298	298
625	623	12	625	7	670	553	385	340	248	670	553	435	390	298	298

KHS = standard height of box
Special height of box = øD + 137 mm but at least 235 mm.
Note: for SK-R-11-Z-...-DK1/-DK2-...-S0, the height of the box changes to h=280 mm for NW 300 and NW 400 and to h = 300 mm for NW 500.

Spigot position

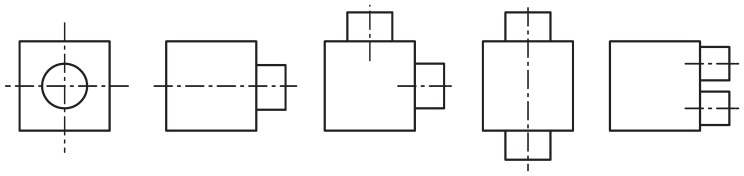

S0 S1 S2 S3 S5

PIL - Ceiling impulse diffuser

Properties

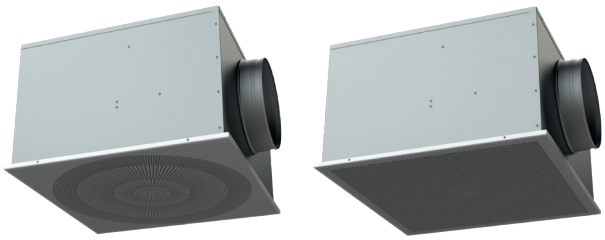

- Diffuser with very high induction, which allows very low speeds to be quickly achieved.
- Easy to clean.
- Pulsating horizontal air throw pattern.
- **PIL-G:** for large supply air volumes.
- **PIL-Q:** square design.
- **PIL-R:** round design.
- Certified according to ATEX Directive 2014/34/EU.

Quick selection

PIL-N

Assumptions: installation height 3 m - with Coanda effect - ΔT cooling = 10 K

								Return air	
Size	**L_{WA} [dB(A)]**	**V_{Sup} (m³/h)**	**Δp_t (Pa)**	**x_{Kr} (m)**	**v_{mean} (m/s)**	**I**	**TV**	**V_{return} (m³/h)**	**Δp_t (Pa)**
310	40	148	40	1.2	0.11	18.9	0.05	404	37
	35	125	29	1	0.10	17.3	0.05	344	27
	30	105	21	0.9	0.10	16.5	0.06	294	20
400	40	251	24	1.5	0.06	20.4	0.05	582	35
	35	219	18	1.3	0.06	18.9	0.05	479	24
	30	190	14	1.1	0.06	17.4	0.05	395	16
500	40	430	22	1.6	0.09	17.2	0.05	983	28
	35	378	17	1.4	0.08	15.9	0.06	819	20
	30	332	13	1.3	0.07	15.3	0.06	682	13
600/625	40	511	21	1.4	0.05	15.4	0.06	1293	25
	35	436	15	1.2	0.06	13.2	0.08	1092	18
	30	372	11	1	0.05	12.1	0.08	922	13

PIL-G

Assumptions: installation height 3 m - with Coanda effect - ΔT cooling = 10 K

								Return air	
Size	**L_{WA} [dB(A)]**	**V_{Sup} (m³/h)**	**Δp_t (Pa)**	**x_{Kr} (m)**	**v_{mean} (m/s)**	**I**	**TV**	**V_{return} (m³/h)**	**Δp_t (Pa)**
400	40	318	27	1.5	0.08	15.5	0.04	582	35
	35	270	20	1.3	0.07	15	0.04	479	24
	30	229	14	1.3	0.07	14.4	0.04	395	16
500	40	570	24	1.5	0.10	14.8	0.04	983	28
	35	496	18	1.4	0.08	14.2	0.05	819	20
	30	432	13	1.3	0.07	14.8	0.04	682	13
600/625	40	890	27	1.8	0.09	12	0.08	1293	25
	35	739	19	1.5	0.09	10.8	0.09	1092	18
	30	614	13	1.3	0.08	10	0.1	922	13

PIL - Ceiling impulse diffuser

Dimensions for PIL-Q

PIL-...-Q...-Z-... with SK-Q-...-Z-... (for supply air)

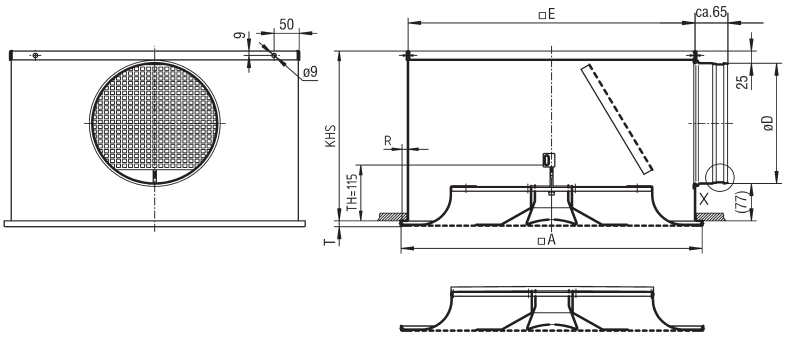

PIL-N-Q...-A-... with SK-Q-...-A-... (for return air)

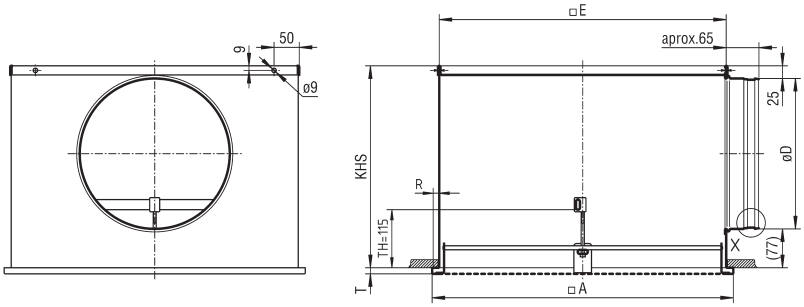

Available sizes for PIL-Q

NW	□A	□E	T	R	PIL-N-Q...-Z		PIL-G-Q...-Z		PIL-N-Q...-A		$ØD_{max}$ for ...-S5
					KHS	ØD	KHS	ØD	KHS	ØD	
310	308	290	12	8	260	158	-	-	300	198	98
400	398	370	12	12	260	158	300	198	300	198	138
500	498	470	12	12	300	198	350	248	350	248	198
600	598	570	12	12	350	248	415	313	400	298	248
625	623	570	12	24	350	248	415	313	400	298	248

KHS = standard height of box
Special height of box = øD + 102 mm but at least 200 mm.

Spigot position

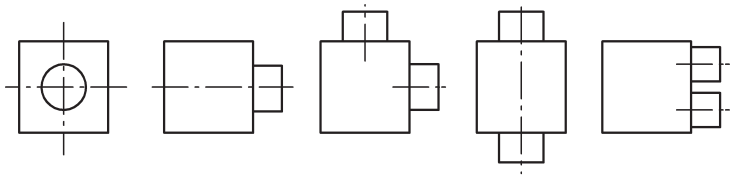

S0 S1 S2 S3 S5

PIL - Ceiling impulse diffuser

Dimensions for PIL-R

PIL-...-R...-Z-... with SK-R-...-Z-... (for supply air)

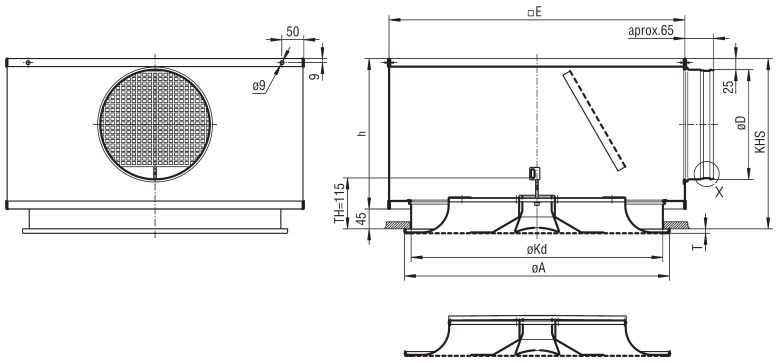

PIL-N-R...-A-... with SK-R-...-A-... (for return air)

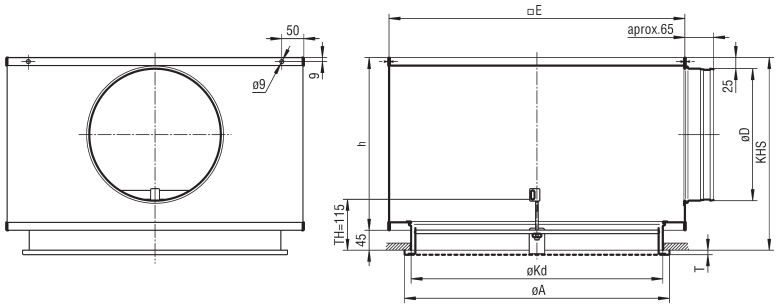

Available sizes for PIL-R

NW	□A	ØKd	□E	T	PIL-N-R...-Z			PIL-G-R...-Z			PIL-N-R...-A			$ØD_{max}$ for ...-S5
					KHS	ØD	h	KHS	ØD	h	KHS	ØD	h	
310	310	298	405	10	295	158	250	-	-	-	335	198	290	158
400	400	370	445	10	295	158	250	335	198	290	335	198	290	178
500	500	470	545	10	335	198	290	385	248	340	385	248	340	198
600	600	570	670	10	385	248	340	450	313	405	435	298	390	298
625	625	570	670	10	385	248	340	450	313	405	435	298	390	298

KHS = standard height of box
Special height of box = øD + 137 mm but at least 235 mm.

Spigot position

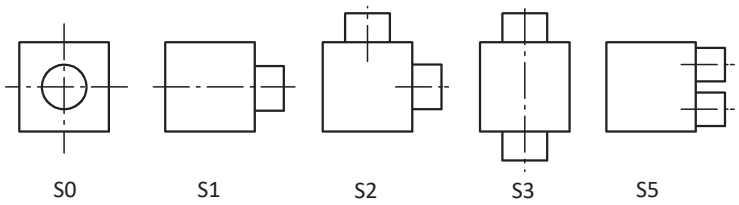

CDD - Design ceiling air diffuser

Properties

- In round and square design.
- For supply air and return air systems.
- Suitable for VAV systems with variable volumetric flows of 40-100 %.
- Faceplate is made of perforated sheet steel with powder coating in RAL 9010.
- Other RAL colours available.

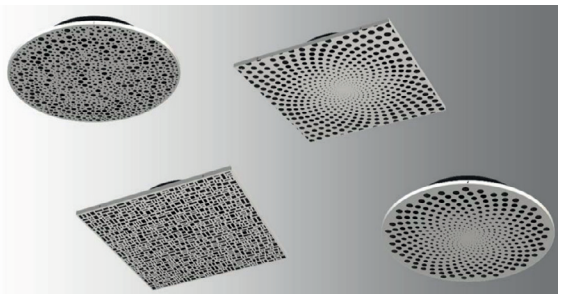

Quick selection

CDD-N-A-Q/-S/-R-Z-...

V_{Sup} (m³/h)	L_{WA} [dB(A)]	$\Delta p_{t\ supply\ air}$ (Pa)
370	30	14
425	35	19
495	40	25

CDD-N-B-Q/-S-Z-...

V_{Sup} (m³/h)	L_{WA} [dB(A)]	$\Delta p_{t\ supply\ air}$ (Pa)
380	30	14
480	35	18
520	40	26

CDD-N-C-Q/-S/-R-A-...

V_{Sup} (m³/h)	L_{WA} [dB(A)]	$\Delta p_{t\ supply\ air}$ (Pa)
390	30	8
470	35	12
590	40	18

CDD-N-E-Q/-S-Z-...

V_{Sup} (m³/h)	L_{WA} [dB(A)]	$\Delta p_{t\ supply\ air}$ (Pa)
360	30	13
415	35	18
485	40	25

Dimensions

Square design (-Q/-S)

CDD-...-Q-...-Z with SK-Q-...-Z-... (for supply air)

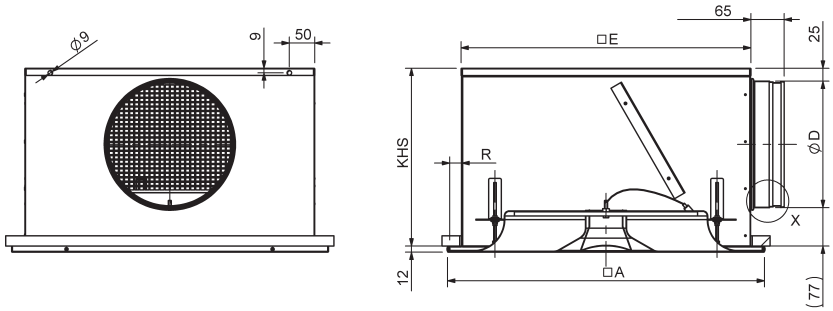

CDD-...-S-...-Z with SK-Q-...-Z-... (for supply air)

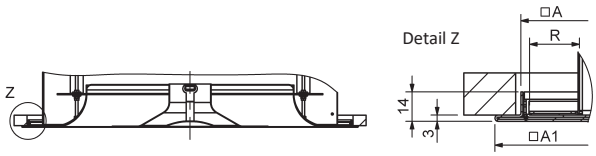

CDD - Design ceiling air diffuser

CDD-...-Q-...-A with SK-Q-...-A-... (for return air)

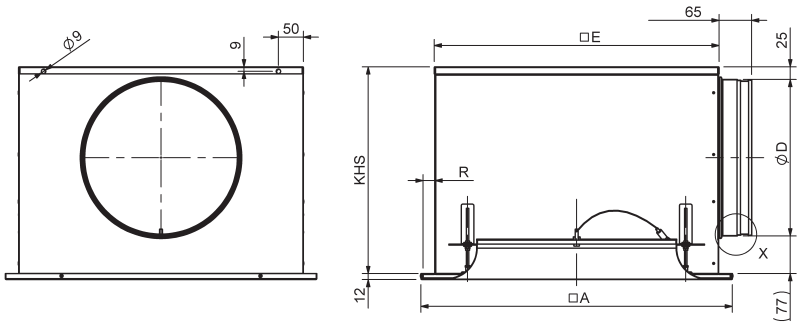

CDD-...-S-...-A with SK-Q-...-A-... (for return air)

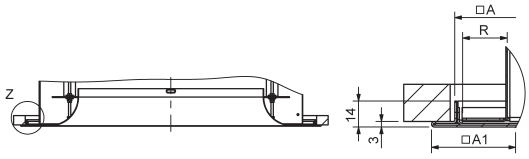

Available sizes

NW	□A	□A1	□E	R	CDD-N-...					CDD-M-...				
					SK-Q-56-Z-...		SK-Q-56-A-...		$ØD_{max}$ (SK-56) for ...-S5	SK-Q-75-Z-...		SK-Q-75-A-...		$ØD_{max}$ for ...-S5
					KHS	ØD	KHS	ØD		KHS	ØD	KHS	ØD	
600	598	623	570	12	350	248	415	313	248	300	198	350	248	198
625	623	648	570	14	350	248	415	313	248	300	198	350	248	198

KHS = standard height of box
Minimum height [KHS] with spigot position S1+S2+S3+S5 = spigot diameter øD + 102 mm and with spigot position S0 = 200 mm.
Ceiling opening with CDD-...-S-... = □A +5 mm.
Ceiling opening with CDD-...-Q-... = □E +5 mm.

CDD - Design ceiling air diffuser

Dimensions

Round design (-R)
CDD-...-R-...-Z with SK-R-...-Z-... (for supply air)

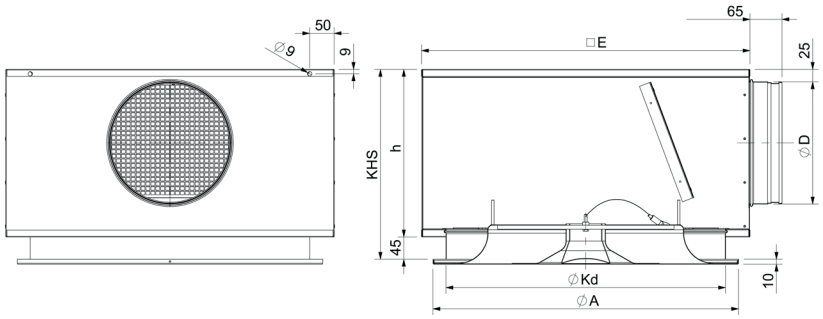

CDD-...-R-...-A with SK-R-...-A-... (for return air)

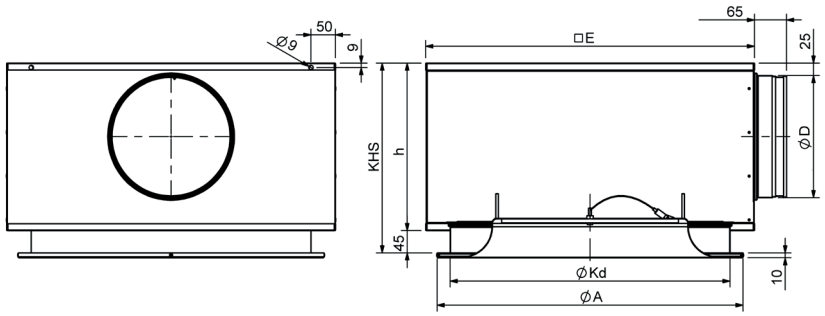

Available sizes

NW	□A	□E	ØKd	CDD-N-...							CDD-M-...						
				SK-R-56-Z-...			SK-R-56-A-...			$ØD_{max}$ (SK-56) for ...-S5	SK-R-75-Z-...			SK-R-75-A-...			$ØD_{max}$ for ...-S5
				KHS	ØD	h	KHS	ØD	h		KHS	ØD	h	KHS	ØD	h	
600	598	670	570	385	248	340	450	313	405	298	335	198	290	385	248	340	198
625	623	670	570	385	248	340	450	313	405	298	335	198	290	385	248	340	198

KHS = standard height of box, minimum height
[KHS] with spigot position S1+S2+S3+S5 = spigot diameter øD + 137 mm and with spigot position S0 = 235 mm.

Spigot position

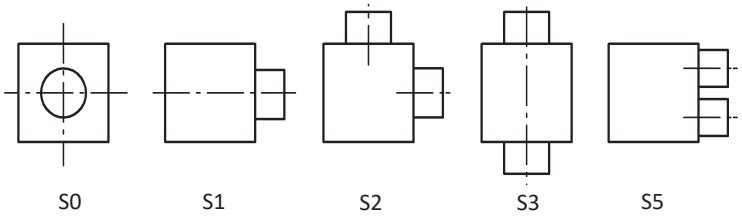

DQC - Ceiling diffuser

Properties

- Tangential air throw pattern with adjustable air deflection blades.
- Installation with room heights between 2.5 m and 10 m.
- Faceplate made of white-painted steel, RAL 9010.
- Fastened with screw mounting.
- Free cross-section, resistance and sound power level constant in all blade positions.

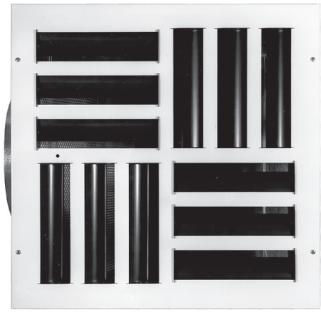

Quick selection

Dimensions	Connection type (H = horizontal; V = vertical)	V_{Sup}	
		35 dB(A)	40 dB(A)
600 x 600/ 625 x 625	H	800 m³/h	1100 m³/h
	V	900 m³/h	1400 m³/h
800 x 800	H	1800 m³/h	2500 m³/h
	V	1900 m³/h	2800 m³/h

Dimensions

DQC-A-..with SK-Q-16-A-..-S1

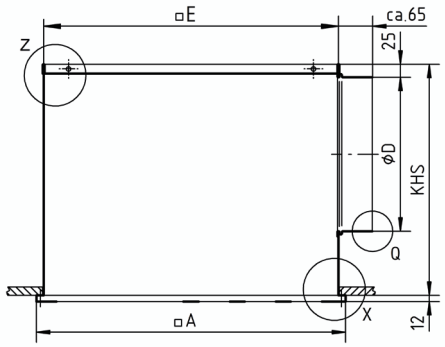

DQC-Z-..with SK-Q-16-Z-..-S1

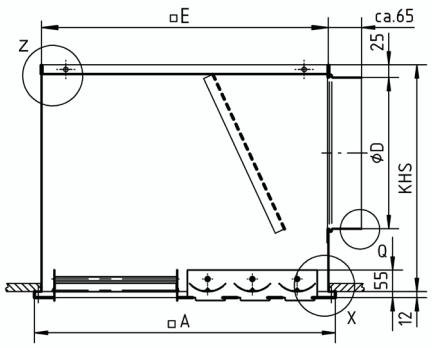

DQC-A-..with SK-Q-16-A-..-S0

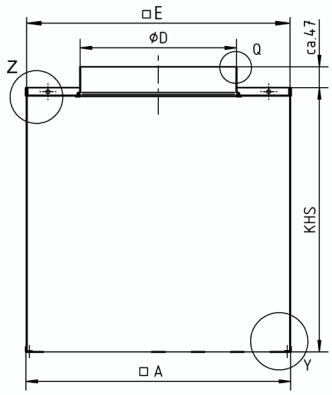

DQC-Z-..with SK-Q-16-Z-..-S0

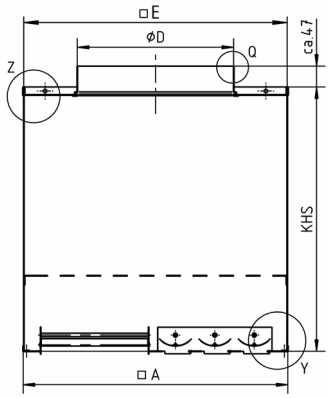

DQC - Ceiling diffuser

Available sizes

NW	□A	SK-Q	□E	KHS	ØD	R	$ØD_{max}$ for ..-S5
600	595	S1	570	447	313	12	248
		S0	595	597	353	12	
625	623	S1	570	447	298	24	248
		S0	620	597	353	24	
800	798	S1	770	647	498	12	353
		S0	795	647	498	12	

KHS = standard height of box
Special height of box = øD + 124 mm but at least 200 mm.

Detail X

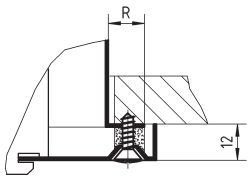

Detail Y

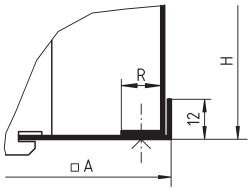

Detail Z (mounting holes)

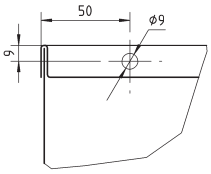

Spigot position

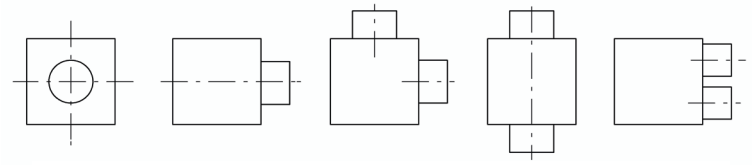

S0 S1 S2 S3 S5

DBB - Ceiling air diffuser

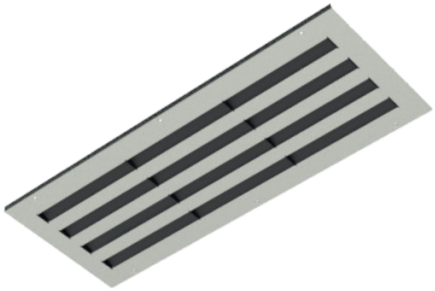

Properties

- Installation on a wall or the ceiling.
- Diffuser with individually adjustable blades, black or white.
- Plenum box and hit-and-miss damper are made of galvanised steel.
- Free cross-section, pressure loss and sound power level remain constant in all blade positions.
- Depending on the model (A, B or C), the air throw can be routed to one, two, three or four sides.
- Band design also available.

Air throws

Air throw	Model		
	DBB-A-...	DBB-B-...	DBB-C-...
...-Z1 (one-way throw)		-	-
...-Z2 (two-way throw)	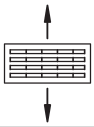	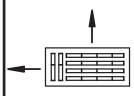	-
...-Z3 (three-way throw)	-	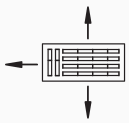	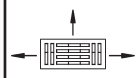
...-Z4 (four-way throw)	-	-	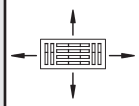

DBB - Ceiling air diffuser

Quick selection

DBB-A

Assumptions: installation height 3 m - with Coanda effect - one-way throw - ΔT cooling = -10 K

L (mm) x H (mm)	L_{WA} [dB(A)]	V_{Sup} (m^3/h)	Δp_t (Pa)	x (m)	v_{mean} (m/s)	x_{Kr} (m)	I	TV
325x115	40	110	72	3.28	0.27	5.8	23.6	0.07
	35	90	49	3.21	0.22	4.7	23.3	0.07
	30	74	33	3.1	0.19	3.8	22.7	0.07
325x215	40	203	48	4.76	0.27	6.4	22.6	0.07
	35	168	33	4.73	0.22	5.2	22.5	0.07
	30	139	23	4.62	0.19	4.3	22.1	0.07
325x315	40	280	48	5.51	0.27	6.5	21.2	0.07
	35	231	33	5.46	0.22	5.3	21	0.07
	30	191	22	5.33	0.19	4.4	20.6	0.07
425x115	40	144	55	3.86	0.27	6.2	23.1	0.07
	35	118	37	3.79	0.22	5	22.8	0.07
	30	97	25	3.66	0.19	4.1	22.2	0.07
425x215	40	252	58	5.19	0.27	6.4	20.9	0.07
	35	208	39	5.14	0.22	5.2	20.8	0.07
	30	172	27	5.02	0.19	4.3	20.4	0.07
425x315	40	353	44	6.1	0.27	6.7	19.9	0.08
	35	292	30	6.06	0.22	5.5	19.8	0.08
	30	241	20	5.91	0.19	4.5	19.4	0.08
525x115	40	177	63	4.35	0.27	6.5	22.6	0.07
	35	145	53	4.26	0.22	5.2	22.2	0.07
	30	120	29	4.16	0.19	4.3	21.8	0.07
525x215	40	313	55	5.87	0.27	6.8	20.7	0.07
	35	259	38	5.83	0.22	5.5	20.6	0.07
	30	214	26	5.69	0.19	4.5	20.1	0.07
525x315	40	422	51	6.58	0.27	6.8	18.9	0.08
	35	348	35	6.51	0.22	5.5	18.8	0.08
	30	287	24	6.34	0.19	4.5	18.3	0.08
625x115	40	206	45	4.67	0.27	6.6	21.7	0.07
	35	170	31	4.62	0.22	5.4	21.6	0.07
	30	139	21	4.45	0.19	4.3	20.9	0.07
625x215	40	206	45	4.67	0.27	6.6	21.7	0.07
	35	170	31	4.62	0.22	5.4	21.6	0.07
	30	139	21	4.45	0.19	4.3	20.9	0.07
625x315	40	510	38	7.35	0.27	7.1	18.9	0.08
	35	421	26	7.28	0.22	5.8	18.8	0.08
	30	347	17	7.09	0.19	4.8	18.4	0.08

DBB - Ceiling air diffuser

L (mm) x H (mm)	L_{WA} [dB(A)]	V_{Sup} (m^3/h)	Δp_t (Pa)	x (m)	v_{mean} (m/s)	x_{Kr} (m)	I	TV
825x115	40	265	58	5.28	0.27	6.8	20.7	0.07
	35	218	39	5.21	0.22	5.5	20.4	0.07
	30	179	27	5.05	0.19	4.5	19.9	0.08
825x215	40	473	36	7.14	0.27	7.2	19.1	0.08
	35	392	24	7.12	0.22	5.9	19.1	0.08
	30	324	17	6.95	0.19	4.8	18.7	0.08
825x315	40	652	30	8.19	0.27	7.3	17.9	0.8
	35	421	26	8.08	0.22	6	17.7	0.08
	30	441	13	7.85	0.19	4.9	17.2	0.09
1025x115	40	322	54	5.8	0.27	7	19.8	0.08
	35	264	37	5.7	0.22	5.7	19.6	0.08
	30	217	25	5.52	0.19	4.6	19	0.08
1025x215	40	560	41	7.57	0.27	7.2	17.9	0.09
	35	463	28	7.52	0.22	5.9	17.8	0.09
	30	384	19	7.38	0.19	4.8	17.5	0.09
1025x315	40	802	34	9.05	0.27	7.6	17.4	0.09
	35	662	23	8.98	0.22	6.2	17.3	0.09
	30	546	16	8.76	0.19	5.1	16.9	0.09
1225x115	40	376	45	6.21	0.27	7.1	19.1	0.08
	35	309	31	-	0.22	5.8	18.8	0.08
	30	253	21	5.91	0.19	4.7	18.3	0.09
1225x215	40	683	31	8.51	0.27	7.6	18	0.08
	35	567	21	8.49	0.22	6.3	17.9	0.08
	30	470	15	8.33	0.19	5.1	17.6	0.09
1225x315	40	959	31	9.92	0.27	7.9	17.1	0.09
	35	791	21	9.83	0.22	6.5	17	0.09
	30	653	14	9.6	0.19	5.3	16.6	0.09

DBB - Ceiling air diffuser

Dimensions

DBB-A-Z...-...-N-...-SM-... (supply air) /
DBB-A-AB-...-N-...-SM-... (return air, with blades)

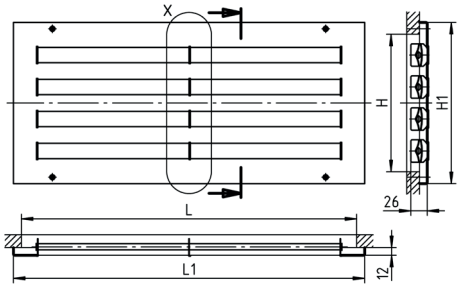

DBB-A-AA-...-N-...-SM-... (return air, without blades)

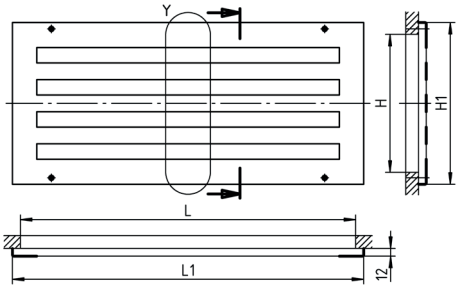

DBB-B-Z...-...-N-...-SM-... (supply air) /
DBB-B-AB-...-N-...-SM-... (return air, with blades)

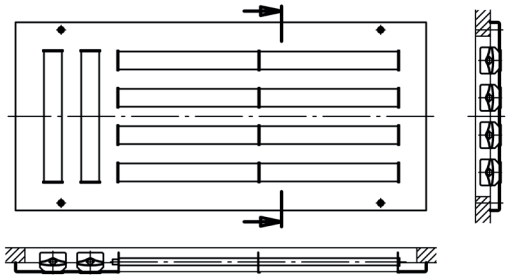

DBB-B-AA-...-N-...-SM-... (return air, without blades)

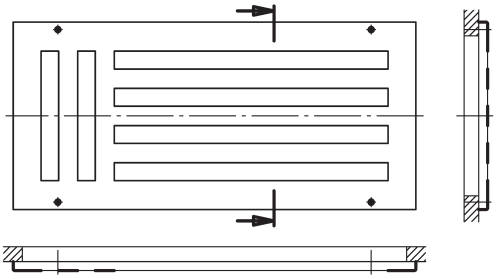

DBB-C-Z...-...-N-...-SM-... (supply air) /
DBB-C-AB-...-N-...-SM-... (return air, with blades)

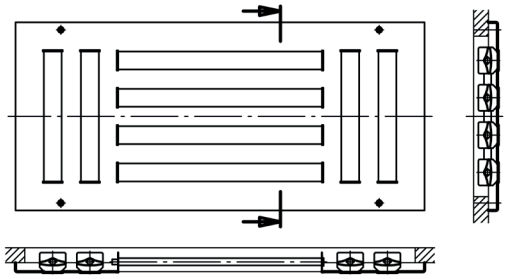

DBB-C-AA-...-N-...-SM-... (return air, without blades)

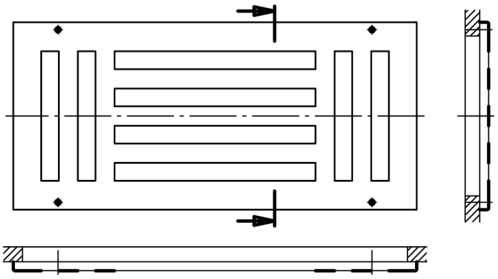

Available sizes

L	L1
325	350
425	450
525	550
625	650
825*	850
1025*	1050
1225*	1250

H	H1
115	152
215	252
315	352

Intermediate rail only with model DBB-A-...
(longitudinal slots only) from L ≥ 825

Intermediate rail detail x (with blades)

Detail Y (without blades)

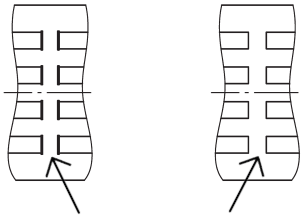

Intermediate rail
only for model DBB-A-...
(longitudinal slots only) from L ≥ 825)

DBB - Ceiling air diffuser

Dimensions of accessories

Plenum box in single design (-AK-48/-AK-50)

AK-48: for ceiling air diffuser DBB-…-A… (return air) (inside painted to RAL colour 9005 [black]).
AK-50: for ceiling air diffuser DBB-…-Z… (supply air) (with integrated perforated straightener).

Plenum box, straight (DBB-…-SM-…-SM shown)
with lateral spigot on the plenum box (-S1, standard)

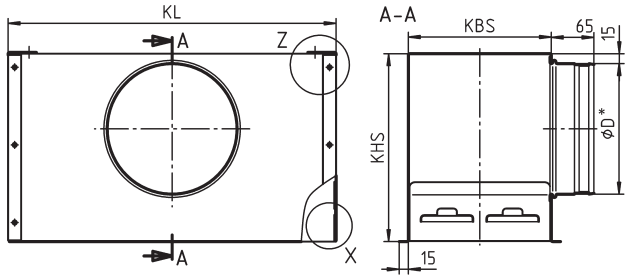

* External

Spigot position

Straight plenum box

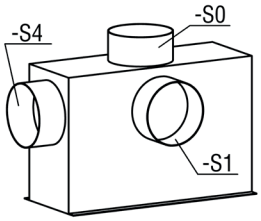

Offset plenum box

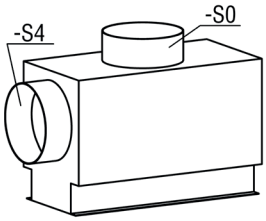

S0 = spigot from above.
S1 = lateral spigot on the box, standard.
S4 = front side spigot, not possible for band design.

DBB - Ceiling air diffuser

Available sizes AK-48/AK-50

H	KBS	L	KL	Spigot position -S1 (standard)				Spigot position -S0				Spigot position -S4			
				KHS	KB2	n x ØD	Plenum box shape	KHS	KB2	n x ØD	Plenum box shape	KHS	KB2	n x ØD	Plenum box shape
115	118	325	320	265	-	1 x Ø158		200*	158*	1 x Ø98		265	188	1 x Ø158	
		425	420												
		525	520							2 x Ø98					
		625	620												
		825	820	285*	-	1 x Ø198						285	228	1 x Ø198	
		1025	1020							4 x Ø98					
		1225	1220												
215	218	325	320	285	-	1 x Ø198		200*	258	1 x Ø198		285	258	1 x Ø198	
		425	420												
		525	520												
		625	620	335*	-	1 x Ø248			-	2 x Ø178		335	278	1 x Ø248	
		825	820												
		1025	1020												
		1225	1220												
315	318	325	320	335	-	1 x Ø248		200*	-	1 x Ø248		335	-	1 x Ø248	
		425	420												
		525	520												
		625	620	400*	-	1 x Ø313			-	2 x Ø222		400	358	1 x Ø313	
		825	820												
		1025	1020												
		1225	1220												

*Dimensions for band design / n = number of spigots

Plenum box shape

Even

-S0 **-S1** **-S4**

Offset

-S0 **-S4**

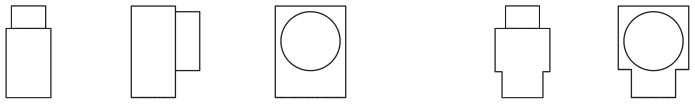

COMBIDQJ - Combined ceiling diffuser for supply air and return air

Properties

- Combined ceiling diffuser for supply air and return air.
- Square faceplate made of sheet steel with powder coating in RAL 9010 (white).
- Suitable for VAV systems with variable volumetric flows.
- Outer area for bringing supply air into the room.
- Inner area for extracting return air from the room.
- Supply air is introduced with high inductance via blades arranged in a circular pattern.
- Suitable for cooling to -10 K.

Quick selection

COMBIDQJ 400

		Pressure loss		
V_{Sup}/V_{return} (m³/h)	L_{WA} [dB(A)]	$\Delta p_{t\ supply\ air}$ (Pa)	$\Delta p_{t\ return\ air}$ (Pa)	$\Delta p_{t\ tota}$ (Pa)
135	25	12	18	30
175	30	19	22	41
190	35	23	38	61
235	40	34	58	92

COMBIDQJ 500

		Pressure loss		
V_{Sup}/V_{return} (m³/h)	L_{WA} [dB(A)]	$\Delta p_{t\ supply\ air}$ (Pa)	$\Delta p_{t\ return\ air}$ (Pa)	$\Delta p_{t\ total}$ (Pa)
185	25	11	18	29
220	30	15	28	15
260	35	21	39	60
300	40	28	52	80

COMBIDQJ 600/625

		Pressure loss		
V_{Sup}/V_{return} (m³/h)	L_{WA} [dB(A)]	$\Delta p_{t\ supply\ air}$ (Pa)	$\Delta p_{t\ return\ air}$ (Pa)	$\Delta p_{t\ total}$ (Pa)
320	25	9.5	21	30.5
370	30	13	28	41
420	35	17	36	53
490	40	25	49	74

Dimensions

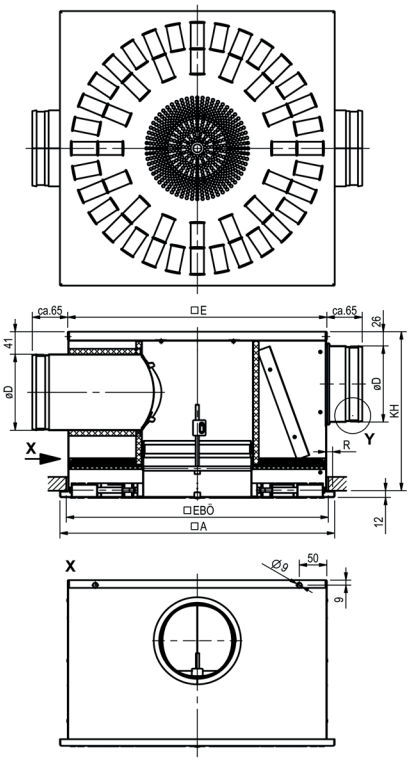

Available sizes

Size	□A	□E	ØD	KH	□EBÖ	R
400	398	370	123	270	375	12
500	498	470	138	290	475	12
600	598	570	198	350	575	12
625	623	570	198	350	575	24

COMBIPIL - Combined ceiling diffuser for supply air and return air

Properties

- Combined ceiling diffuser for supply air and return air.
- Square faceplate made of sheet steel with powder coating in RAL 9010 (white).
- Suitable for VAV systems with variable volumetric flows.
- Outer area for bringing supply air into the room.
- Inner area for extracting return air from the room.
- Supply air is introduced using inductance.
- Air throw, horizontal, radially pulsing.
- Suitable for cooling to -10 K.

Quick selection

COMBIPIL 400

		Pressure loss		
V_{Sup}/V_{return} (m³/h)	L_{WA} [dB(A)]	$\Delta p_{t\ supply\ air}$ (Pa)	$\Delta p_{t\ return\ air}$ (Pa)	$\Delta p_{t\ total}$ (Pa)
95	30	19	9	28
110	35	25	12	37
130	40	35	17	52

COMBIPIL 500

		Pressure loss		
V_{Sup}/V_{return} (m³/h)	L_{WA} [dB(A)]	$\Delta p_{t\ supply\ air}$ (Pa)	$\Delta p_{t\ return\ air}$ (Pa)	$\Delta p_{t\ total}$ (Pa)
155	25	13	13	26
175	30	16	15	31
205	35	22	23	45
235	40	29	30	59

COMBIPIL 600/625

		Pressure loss		
V_{Sup}/V_{return} (m³/h)	L_{WA} [dB(A)]	$\Delta p_{t\ supply\ air}$ (Pa)	$\Delta p_{t\ return\ air}$ (Pa)	$\Delta p_{t\ total}$ (Pa)
275	25	11	15	26
310	30	14	19	33
350	35	18	24	42
395	40	23	34	57

Dimensions

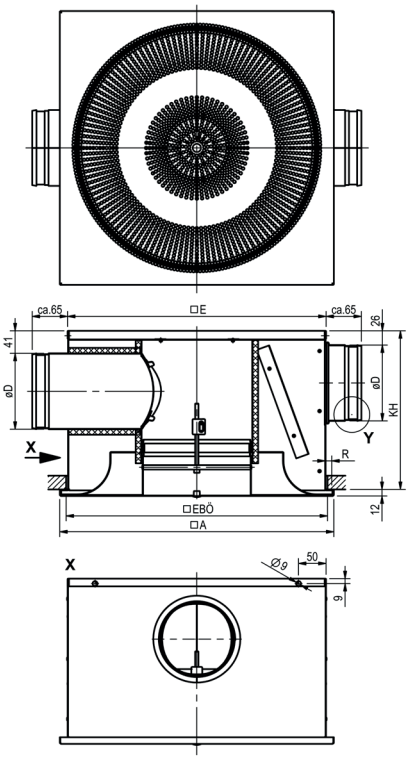

Available sizes

Size	□A	□E	ØD	KH	□EBÖ	R
400	398	370	123	270	375	12
500	498	470	138	290	475	12
600	598	570	198	350	575	12
625	623	570	198	350	575	24

DHV - Swirl diffuser

Properties

- Fixed swirl impellers for inductive air throw pattern.
- Radial swirl-shaped swirl jet for a rapid reduction in temperature and velocity.
- It is possible to connect the diffuser to ventilation pipes directly or with the help of special transition pieces or with a plenum box.
- Panelled cover plate available.
- Available in white plastic or painted aluminium.

Quick selection

DHV-K with plenum box

Assumptions: installation height 3.6 m - with Coanda effect - ΔT cooling = 10 K

							Return air	
Size	L_{WA} [dB(A)]	V_{Sup} (m³/h)	Δp_t (Pa)	X+Y (m)	v_{mean} (m/s)	x_{Kr} (m)	V_{return} (m³/h)	Δp_t (Pa)
125	40	138	48	4.6	0.11	2.8	160	59
	35	114	32	4.1	0.1	2.3	135	42
	30	94	22	3.8	0.11	1.9	113	29
160	40	201	35	3.9	0.2	2.1	240	56
	35	163	23	3.6	0.16	1.8	202	40
	30	133	16	3.3	0.13	1.5	171	29
200	40	269	43	3.2	0.17	1.4	347	51
	35	222	29	2.9	0.16	1.1	285	34
	30	350	24	2.8	0.14	1	233	23
250	40	439	37	4.3	0.13	2.5	493	43
	35	391	29	4.1	0.12	2.3	426	32
	30	350	24	4	0.11	2.1	368	24

Dimensions

DHV-...-VM (standard, without plenum box) for flexible duct connection

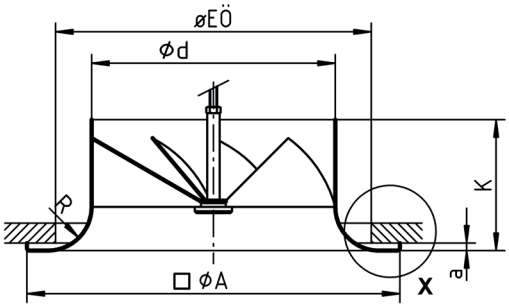

Attention: counter pole brace on site!

Detail X

DHV-Q-...-100-400-...

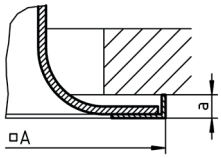

DHV-R-...-100-...

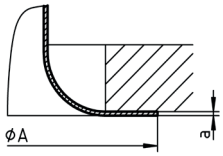

DHV-R-...-125-400-...

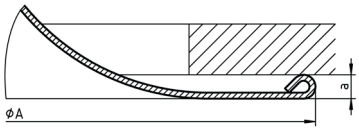

DHV-K-....-125-250-...

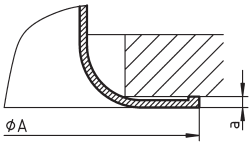

Available sizes

NW	Ød	□/ØA	ØF	K	R	a		
						DHV-Q-...	DHV-R-...	DHV-K-...
100	98	155	128	50	15	6	1	-
125	123	185	144	63	17	6	5	3
160	158	240	184	80	20	6	5	3
200	198	300	254	105	35	6	5	3
250	248	380	324	130	45	6	5	3
315	313	490	419	170	60	6	5	-
400	398	630	545	220	80	12	8	-

DHV - Swirl diffuser

Dimensions of accessories

Plenum box (SK-R-09-Z-...), for supply air, with VM

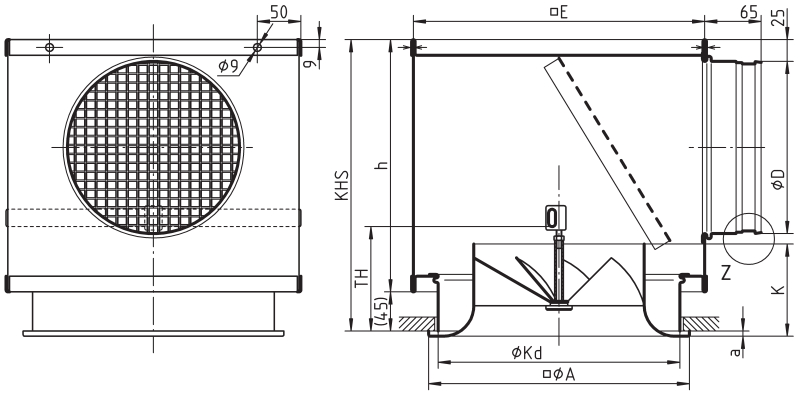

Ceiling opening with SK-R-09-...: øKd +5

Spigot position

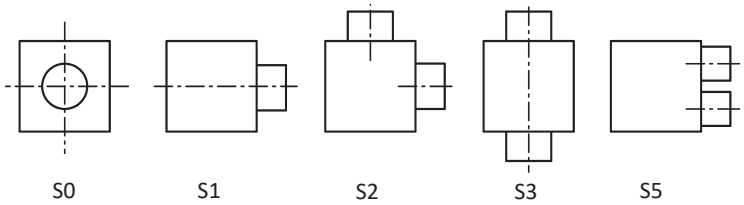

Available sizes

NW	□/ØA	K	ØKd	□E	ØD	KHS	h	TH	A			$ØD_{max}$ for ...-S5
									DHV-Q-...	DHV-R-...	DHV-K-...	
100	155	50	123	245	98	235	190	90	6	1	-	78
125	185	63	158	245	123	260	215	90	6	5	3	78
160	240	80	198	290	158	295	250	100	6	5	3	98
200	300	105	265	335	198	335	290	120	6	5	3	123
250	380	130	335	405	248	385	340	150	6	5	3	158
315	490	170	425	545	248	385	340	190	6	5	3	198
400	630	220	570	670	313	555	510	290	12	8	-	298

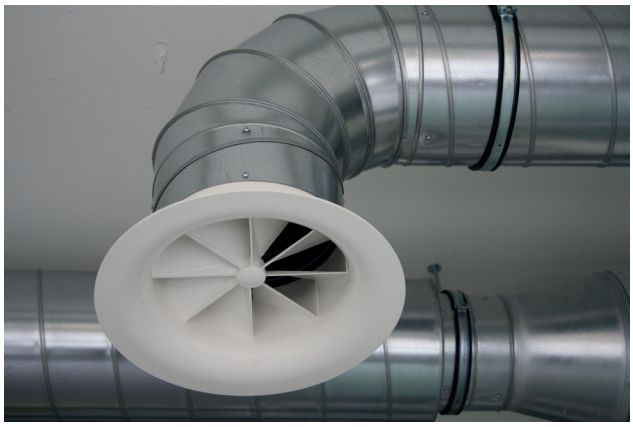

LAQ - Ceiling return air diffuser

Quick selection

LAQ 310

V_{return} (m^3/h)	L_{WA} [dB(A)]	$\Delta p_{t\ return\ air}$ (Pa)
290	30	19
350	35	28
400	40	37

LAQ 400

V_{return} (m^3/h)	L_{WA} [dB(A)]	$\Delta p_{t\ return\ air}$ (Pa)
395	30	16
480	35	24
580	40	35

LAQ 500

V_{return} (m^3/h)	L_{WA} [dB(A)]	$\Delta p_{t\ return\ air}$ (Pa)
680	30	13
820	35	19
990	40	28

LAQ 600/625

V_{return} (m^3/h)	L_{WA} [dB(A)]	$\Delta p_{t\ return\ air}$ (Pa)
920	30	13
1090	35	18
1295	40	25

Performance data without filter mat.

LAQ-F

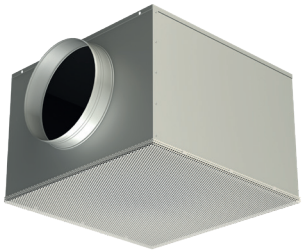

Properties

- Permanently fitted diffuser.
- With perforated faceplate.
- With clip mounting (-KM).
- Suitable for installation in ceiling.

Dimensions

LAQ-F-...-SK-Q-20-...

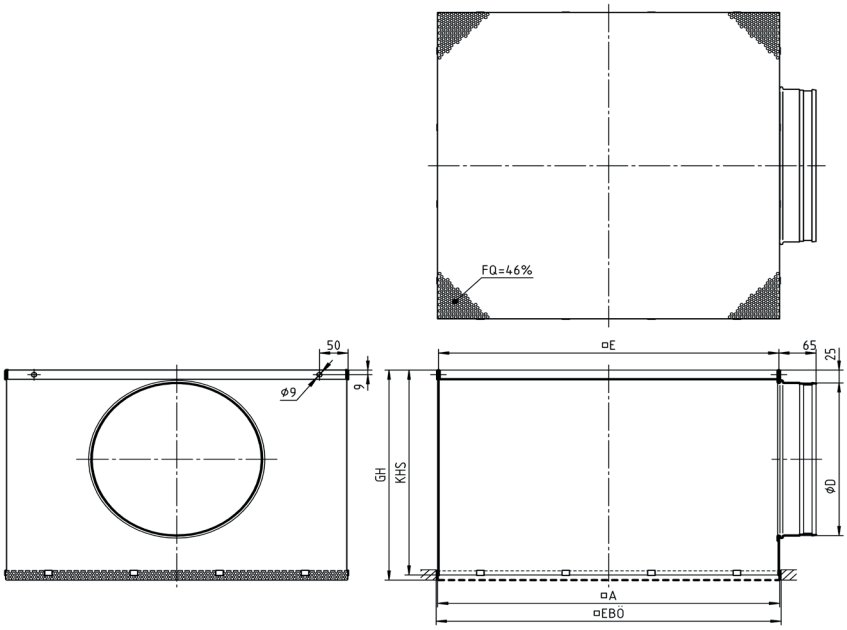

Available sizes LAQ-F

NW	□A	□E	ØD	$ØD_{max}$ for S5	KHS	GH	□EBÖ
310	308	305	198	98	300	310	310
400	398	395	198	138	300	310	400
500	498	495	248	198	350	360	500
600	598	595	298	248	400	410	600
625	623	620	298	248	400	410	625

KHS = standard height of box
Minimum height [KHS] with spigot position S0 at least 200 mm.
Minimum height [KHS] with spigot position S1 / S2 / S3 / S5 = spigot diameter + 102 mm but at least 200 mm.

Only available with a plenum box.

LAQ - Ceiling return air diffuser

LAQ-E

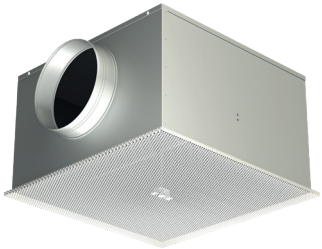

Properties

- Removable diffuser.
- With perforated faceplate.
- With concealed mounting (-VM) using central screws.
- Available with filter mat as an option.

Dimensions

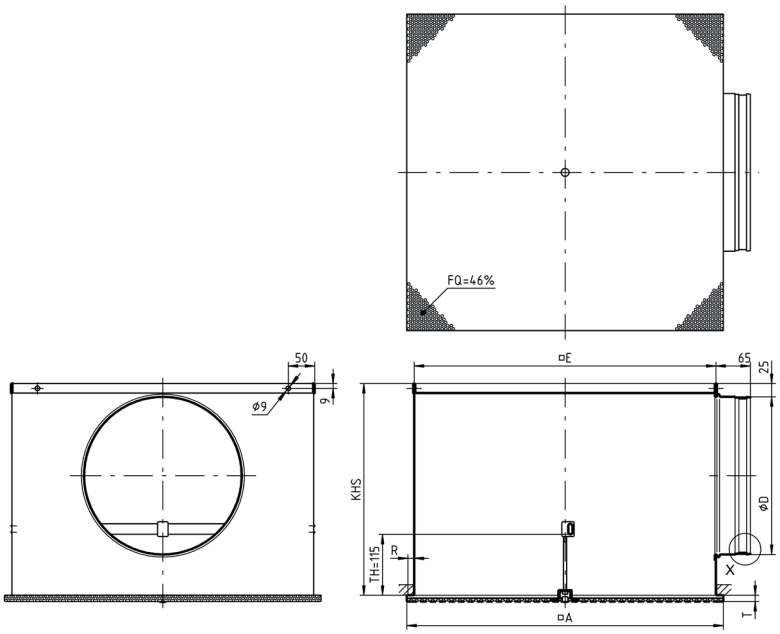

Available sizes LAQ-E

NW	□A	□E	KHS	ØD	$ØD_{max}$ for S5	R	T
310	308	290	300	198	98	8	12
400	398	370	300	198	138	12	12
500	498	470	350	248	198	12	12
600	598	570	400	298	248	12	12
625	623	570	400	298	248	24	12

KHS = standard height of box
Minimum height [KHS] with spigot position S0 at least 200 mm.
Minimum height [KHS] with spigot position S1 / S2 / S3 / S5 = spigot diameter + 102 mm but at least 200 mm.

Only available with a plenum box.

LAQ - Ceiling return air diffuser

LAQ-K

Properties

- Hinged diffuser.
- With perforated faceplate hinged on one side (click system).
- Front frame fastened using central screw (concealed mounting -VM).
- Available with filter mat as an option.

Dimensions

LAQ-K-...-SK-Q-59-...

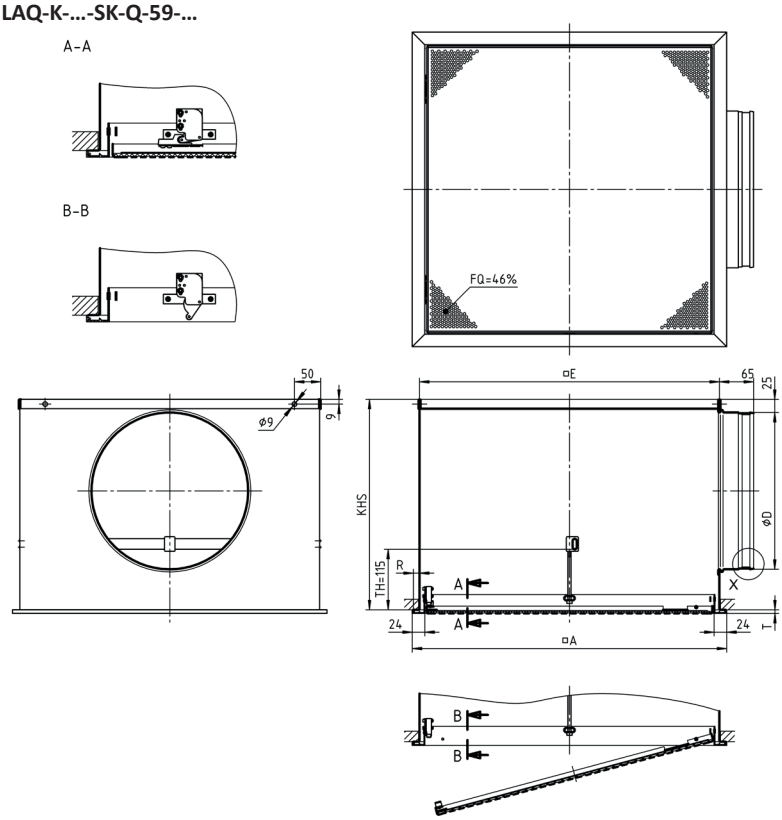

Available sizes LAQ-K

NW	□A	□E	KHS	ØD	$ØD_{max}$ for S5	R	T
310	308	290	300	198	98	8	7
400	398	370	300	198	138	12	7
500	498	470	350	248	198	12	7
600	598	570	400	298	248	12	7
625	623	595	400	298	248	12	7

Only available with a plenum box.

KHS = standard height of box
Minimum height [KHS] with spigot position S0 at least 200 mm.
Minimum height [KHS] with spigot position S1 / S2 / S3 / S5 = spigot diameter + 102 mm but at least 200 mm.

Spigot position

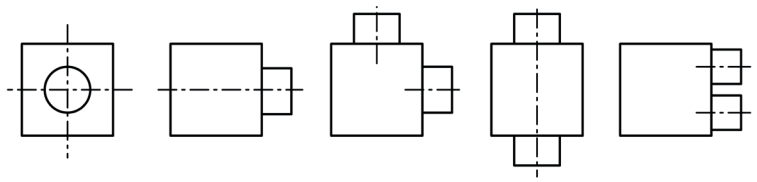

S0 S1 S2 S3 S5

CPL - Ceiling air diffuser

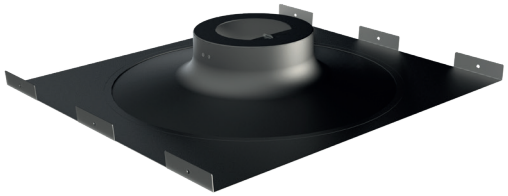

Properties

- CPL-E for perforated plates.
- Four ceiling panel widths: 300, 312, 600, 625 mm.
- Diffuser attachment on a ceiling panel with blind rivets.
- Connections possible with plenum box or 90° bend.

Quick selection

NW	ΔT_o (K)	V_{min}	
		(m³/h)	[l/s]
300	4	35	9.7
	6	45	12.5
	8	50	13.9
	10	60	16.7
500	4	90	25.0
	6	110	30.6
	8	130	36.1
	10	150	41.7

Dimensions

CPL-E-Z (only ceiling air diffuser/for supply air)

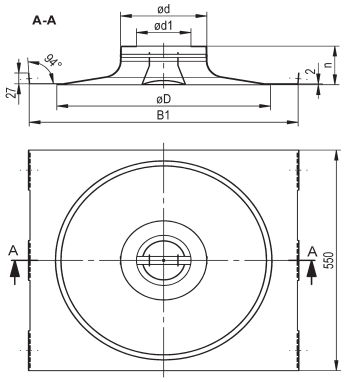

CPL-E-A (only ceiling air diffuser/for return air)

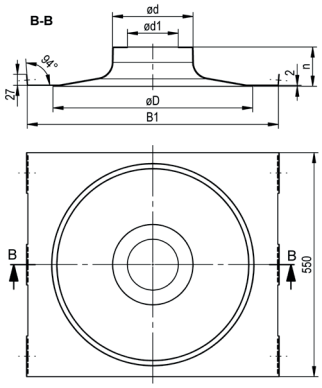

CPL-E-... (ceiling air diffuser mounted to the ceiling panel)
FQ = 16.2 % (RG-L15; Ø2.5 mm)
FQ = 25.0 % (RV-L6; Ø2.1 mm)

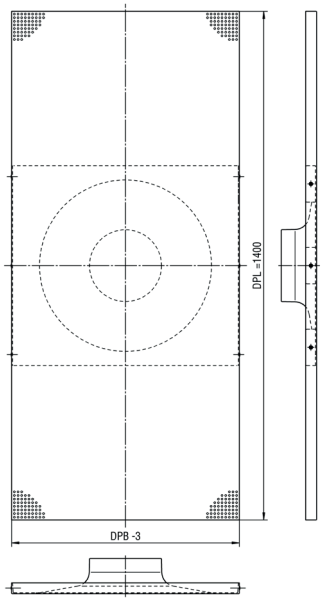

PN = Countersunk pop rivet

CPL - Ceiling air diffuser

Available sizes

NW	Ød	Ød1	ØD	n	B1			
					DPB			
					300	312	600	625
300	124	105	286	82	292	305	592	617
500	198	125	490	97	-	-	592	617

DPB = ceiling panel width
DPL = ceiling panel length

Dimensions of accessories

Plenum box

SK-...-S1 (standard), lateral spigot

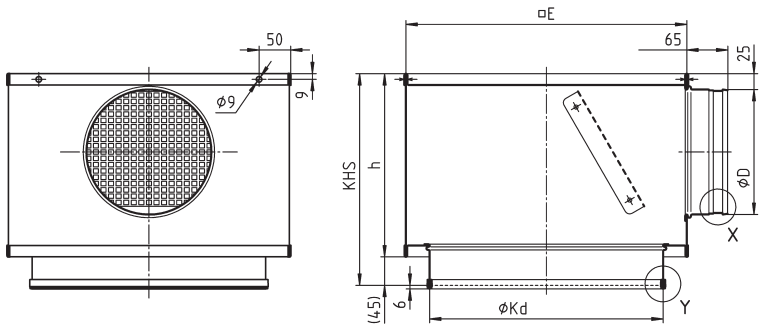

Detail Y (SK mounted to CPL)

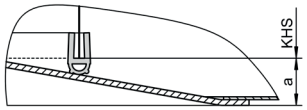

CPL and SK are not permanently connected to one another.

SK-...-S0, spigot from above

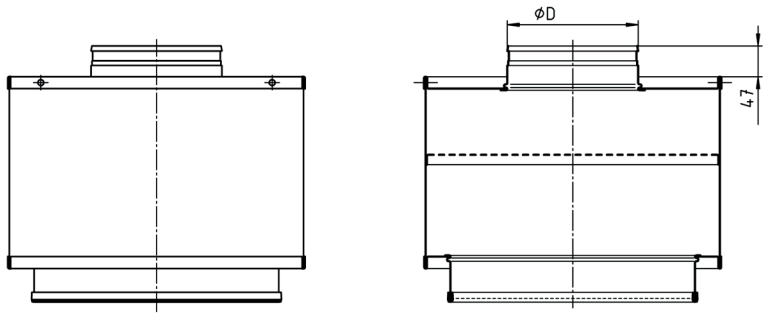

Available sizes

NW	□E	ØKd	KHS	ØD	h	a
300	290	222	295	158	250	13
500	445	370	335	198	290	17

KHS = standard height of box
Special height of box øD + 137 mm, but at least 235 mm.
Note: for SK-R-71-Z-...-DK1/-DK2-...-S0, the height of the box changes to h = 280 mm for NW 300 and to h = 300 mm for NW 500.

Spigot position

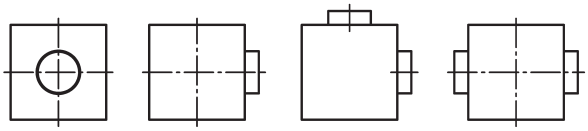

S0 S1 S2 S3

FKW - Particle filter box

Properties

- Sealed plenum box, painted RAL 9010 on inside and outside.
- With interior differential pressure and aerosol monitoring device.
- With vertical or horizontal connection spigot.
- For particle filter class H13 and H14.
- Air diffuser FDBB.

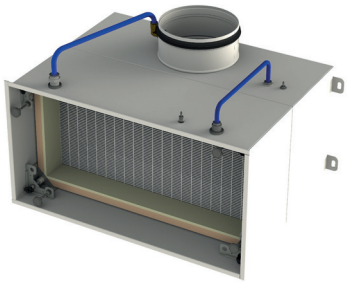

Quick selection

Air volume m³/h for filter UXS

	Initial pressure		
Filter	**50 Pa**	**100 Pa**	**150 Pa**
UXS-H13	170	300	400
UXS-H14	160	290	-

Air volume m³/h for filter UXA

	Initial pressure		
Filter	**50 Pa**	**100 Pa**	**150 Pa**
UXA-H13	190	330	480
UXA-H14	170	320	-

Dimensions

FKW-...-H-...-M000-D1-...-P0-...

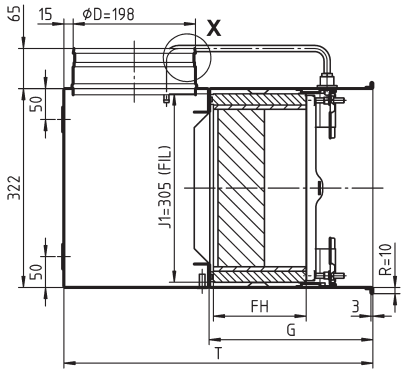

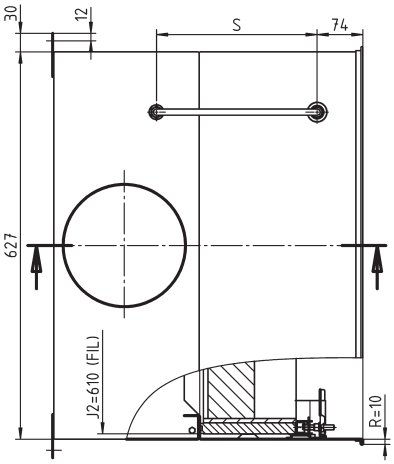

FDBB-A-Z1-625-315-...-MB-...
FDBB-A-Z2-625-315-...-MB-...
FDBB-A-AB-625-315-...-MB-...

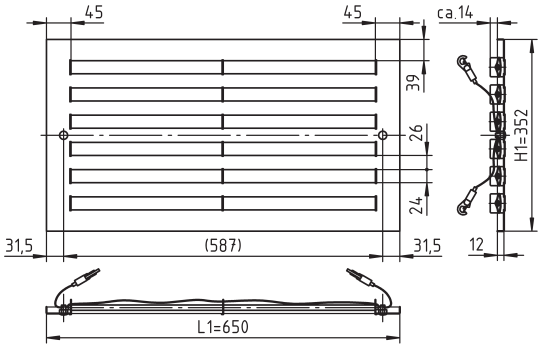

Available sizes

	Filter dimensions			T	S	G
	J1	**J2**	**FH**			
FKW-1-...-H-...	305	610	90	440	200	205
FKW-2-...-H-...	305	610	150	500	260	265

FKU - Particle filter box

Properties

- Use in cleanrooms in the pharmaceutical, electronic, precision mechanical and optical industries, hospitals and laboratories.
- Ensures flows are extremely clean and germ-free.
- The filter box type consists of electrolytically galvanised sheet steel painted in RAL 9010 (white).
- For particle filter with rubber seal, class H13 and H14.

Quick selection

Air volume m³/h for filter UXS

		Initial pressure		
NW	**Filter**	**50 Pa**	**100 Pa**	**150 Pa**
FKU400	UXS-H13	90	170	250
FKU400	UXS-H14	100	170	-
FKU500	UXS-H13	160	300	440
FKU500	UXS-H14	180	300	-
FKU600	UXS-H13	230	460	680
FKU600	UXS-H14	260	460	-
FKU625	UXS-H13	250	500	740
FKU625	UXS-H14	290	500	-
FKU650	UXS-H13	280	560	830
FKU650	UXS-H14	310	560	-
FKU800	UXS-H13	430	890	1330
FKU800	UXS-H14	490	890	-

Air volume m³/h for filter UXA

		Initial pressure		
NW	**Filter**	**50 Pa**	**100 Pa**	**150 Pa**
FKU400	UXS-H13	100	190	280
FKU400	UXS-H14	110	190	-
FKU500	UXS-H13	160	325	480
FKU500	UXS-H14	180	325	-
FKU600	UXS-H13	240	500	750
FKU600	UXS-H14	290	500	-
FKU625	UXS-H13	260	530	790
FKU625	UXS-H14	300	530	-
FKU650	UXS-H13	290	600	900
FKU650	UXS-H14	330	600	-
FKU800	UXS-H13	460	960	1430
FKU800	UXS-H14	560	960	-

FKU - Particle filter box

Dimensions

FKU-H-...-M000-D1-...-P0-...

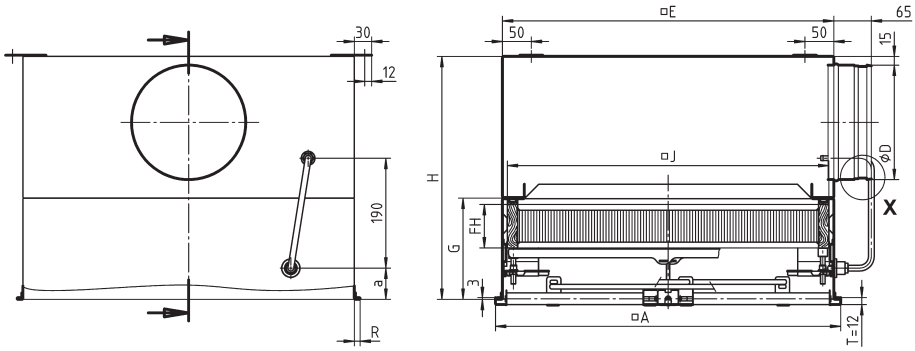

Available sizes

NW	Filter dimensions		□A	ØD	□E	R	FDQJ-Z / FDQJ-A (supply air/return air)			FPIL-A (return air)			FPIL-Z (supply air)		
	□J	FH					H	G	a	H	G	a	H	G	a
400	357	75	398	148	374	10	370	175	54	370	175	54	410	215	94
500	457	75	498	158	474	10	380	175	54	380	175	54	420	215	94
600	557	75	598	198	574	10	420	175	54	420	175	54	460	215	94
625	575	75	623	198	592	12	420	175	54	420	175	54	460	215	94
650	610	75	648	248	627	10	470	175	54	470	175	54	510	215	94
800	754	75	798	248	771	13,5	470	175	54	-	-	-	-	-	-

Air diffusers for NW 650 consist of a 650x650 mm faceplate with a drill pattern of size 600.

FKF - Particle filter box

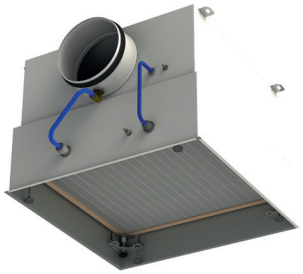

Properties

- With fluid seal on the filter cell.
- For use in cleanrooms in the pharmaceutical, electronic, precision mechanical and optical industries, hospitals and laboratories.
- Ensures flows are extremely clean and germ-free.
- The filter cell can be mounted and dismounted several times without having to change the fluid.
- The filter box type consists of electrolytically galvanised sheet steel painted in RAL 9010 (white).
- Certified according to ATEX Directive 2014/34/EU.

Quick selection

Air volume m³/h for filter UXA

		Initial pressure		
NW	**Filter**	**50 Pa**	**100 Pa**	**150 Pa**
FKF400	UXA-H13	110	220	320
FKF400	UXA-H14	130	210	-
FKF500	UXA-H13	190	380	550
FKF500	UXA-H14	220	360	-
FKF600	UXA-H13	290	580	850
FKF600	UXA-H14	340	560	-
FKF625	UXA-H13	300	620	910
FKF625	UXA-H14	350	600	-
FKF650	UXA-H13	340	700	1030
FKF650	UXA-H14	400	670	-
FKF800	UXA-H13	540	1130	1650
FKF800	UXA-H14	630	1080	-

FKF - Particle filter box

Dimensions

FKF-H-...-M000-D1-...

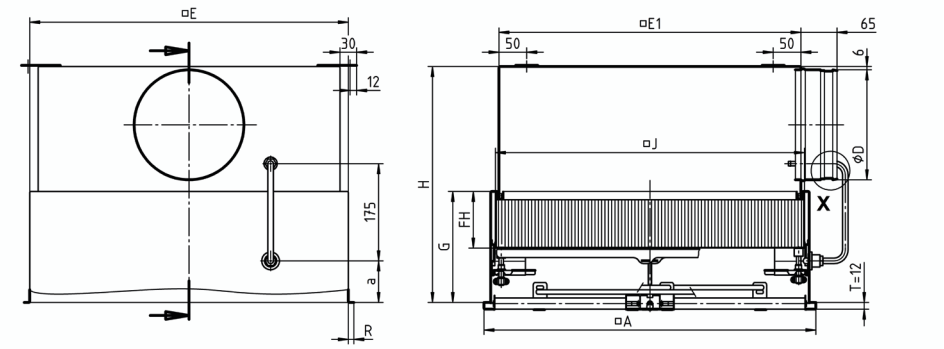

Available sizes

NW	Filter dimensions		□A	ØD	□E	□E1	R	FDQJ-Z / FDQJ-A (supply air/return air)			FPIL-A (return air)			FPIL-Z (supply air)		
	□J	FH						H	G	a	H	G	a	H	G	a
400	357	102	398	148	374	344	10	375	200	75	375	200	75	415	240	115
500	457	102	498	158	474	444	10	385	200	75	385	200	75	425	240	115
600	557	102	598	198	574	544	10	425	200	75	425	200	75	465	240	115
625	575	102	623	198	592	562	12	425	200	75	425	200	75	465	240	115
650	610	102	648	248	627	597	10	475	200	75	475	200	75	515	240	115
800	762	102	798	248	779	749	9	475	200	75	-	-	-	-	-	-

Air diffusers for NW 650 consist of a 650x650 mm faceplate with a drill pattern of size 600.

Slot diffusers

DSC - Slot diffuser

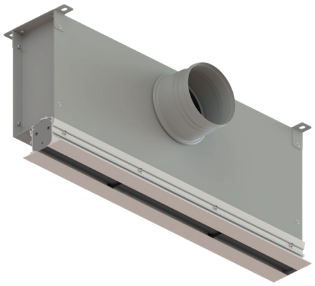

Properties

- Constant pressure loss and sound power level do not depend on the direction of the blade position.
- The high induction ensures large ΔT and long jet paths.
- Use in VAV systems from 100 % to 40 %.
- Easy installation in all types of walls and ceilings (different frame profiles).
- Individually adjustable blades.
- Mounting on walls and ceilings - additional profiles available.
- All RAL colours available - blades made of RAL 9010 or 9005 plastic or also in painted aluminium available.
- Band design also available.

Quick selection

DSC length 1 m with standard connection
Assumptions: distance 3 m - with Coanda effect - two-way throw - ΔT cooling = 10 K

Number of blades	L_{WA} [dB(A)]	V_{Sup} (m³/h)	Δp_t (Pa)	x (m)	v_{mean} (m/s)	TV
1	35	129	37	5.1	0.10	0.04
	30	108	26	4.1	0.09	0.04
	25	91	18	3.2	0.08	0.04
2	35	201	29	4.7	0.11	0.05
	30	169	20	3.7	0.10	0.05
	25	142	14	2.9	0.09	0.06
3	35	236	27	3.8	0.12	0.07
	30	198	19	3	0.11	0.07
	25	166	13	2.4	0.10	0.08
4	35	251	34	3.2	0.11	0.09
	30	211	24	2.6	0.10	0.10
	25	177	17	2	0.09	0.11

Dimensions

Standard frame profile "R0"

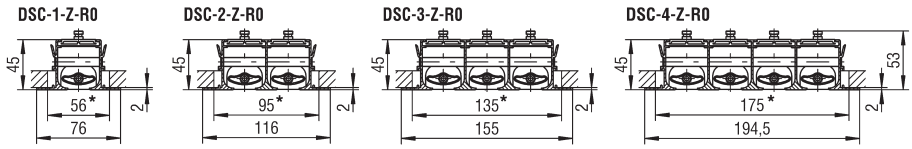

Narrow frame profile "S0"

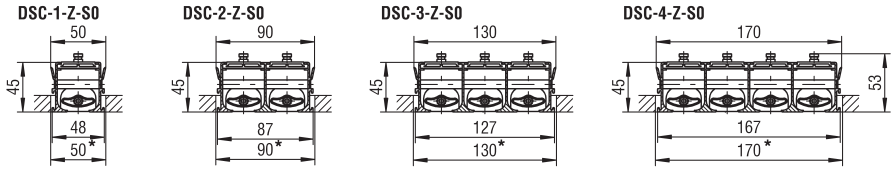

Special frame profile "P0"

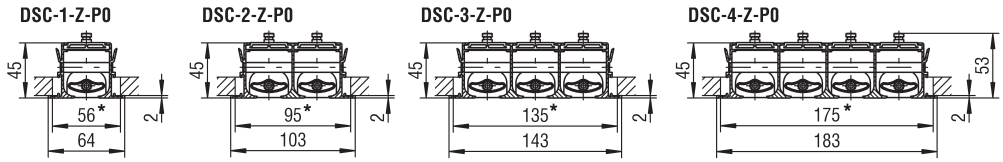

DSC - Slot diffuser

Dimensions of accessories

Plenum box (-ASK-24-...-N-...-FV-...-S1/S2-...)

- With fixed connection.
- With lateral spigot/lateral spigot located on the opposite side.
- As standard for the models DSC-...-R0/DSC-...-S0 and DSC-...-P0.
- The slot diffuser is permanently connected to the plenum box.

With lateral spigot (-S1, standard)

DSC-1-...-ASK-24-...-N-...-FV-S1-...

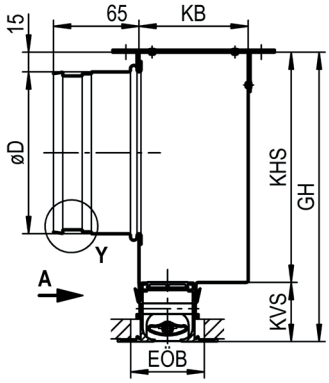

DSC-2/3/4-...-ASK-24-...-N-...-FV-S1-...

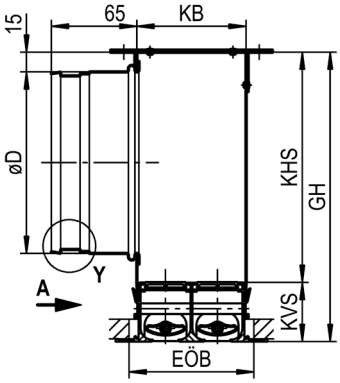

Available plenum box sizes (ASK-24-...-N-...-FV-...-S1/S2-...)

	KB	GH	KHS	KVS	EÖB	
					...-R0 ...-P0	...-S0
DSC-1	83	220	175	45	56	50
DSC-2	83	220	175	45	95	90
DSC-3	122	220	175	45	135	130
DSC-4	162	280	235	45	175	170

Number of connection spigots

	ØD	
	L ≤ 1000 mm	1000 > L ≤ 1500 mm
DSC-1	1 x Ø98	1 x Ø123
DSC-2	1 x Ø138	1 x Ø138
DSC-3	1 x Ø138	2 x Ø138
DSC-4	1 x Ø158	2 x Ø138

DSC - Slot diffuser

L	KL	EÖL		Weight, incl. plenum box (kg)			
		...-R0	...-P0 ...-S0	DSC-1	DSC-2	DSC-3	DSC-4
1000	997	1010	1015	5.5	6.0	7.0	9.0
1500	1497	1510	1515	8.0	8.5	10.0	12.5

Spigot position

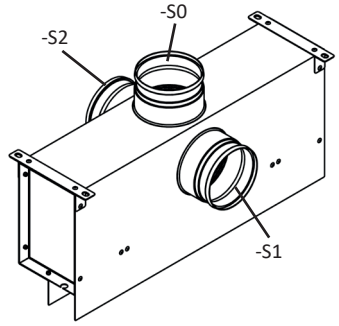

S0 = spigot from above.
S1 = lateral spigot (standard).
S2 = lateral spigot located on the opposite side (only possible for 1-slot models).

Lateral spigot (-S1)/lateral spigot located on the opposite side (-S2)

View A/with 1 spigots

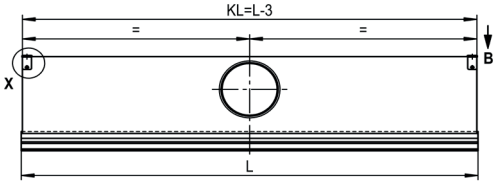

View A/with 2 spigots

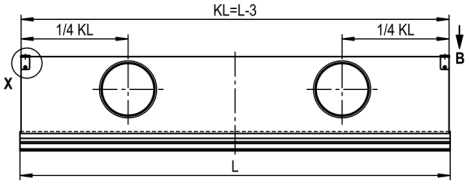

DSCPL - Slot diffuser for plasterboard ceilings

Properties

- The slot diffuser type DSCPL is suitable for use in rooms with a height between 2.6 m and 4 m for direct installation in plasterboard ceilings or ceiling cavities (pressure ceilings).
- The special shape of the frame profile allows good installation in the plasterboard ceiling.
- The outer profile allows overfilling so that only the blades are visible.
- Frame is made of untreated aluminium.
- Diffuser fastened with screw mounting.
- Band design also available.

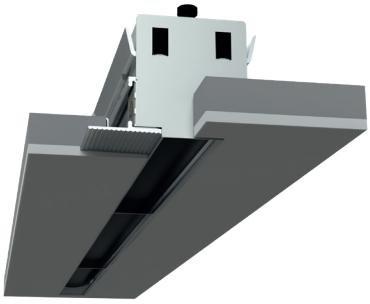

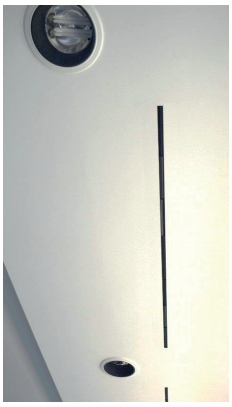

Quick selection

DSCPL length 1 m without plenum box
Supply air model

DSCPL-1 (1-slot)				DSCPL-2 (2-slot)			
V_{Sup}		L_{WA} [dB(A)]	Δp_t (Pa)	V_{Sup}		L_{WA} [dB(A)]	Δp_t (Pa)
(m³/h)	[l/s]			(m³/h)	[l/s]		
60	16.7	< 20	5	100	27.8	< 20	5
80	22.2	21	8	130	36.1	22	8
100	27.8	28	13	160	44.4	28	13
120	33.3	33	17	200	55.6	35	17

Dimensions

Supply air (-Z):

DSCPL-1-Z (1-slot)

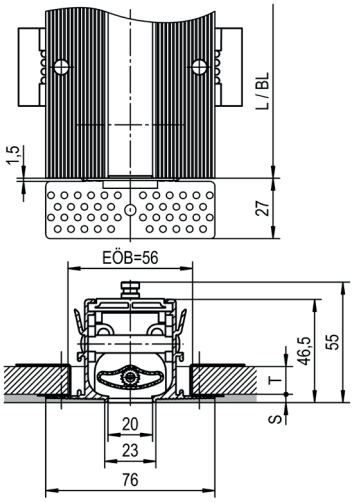

DSCPL-2-Z (2-slot)

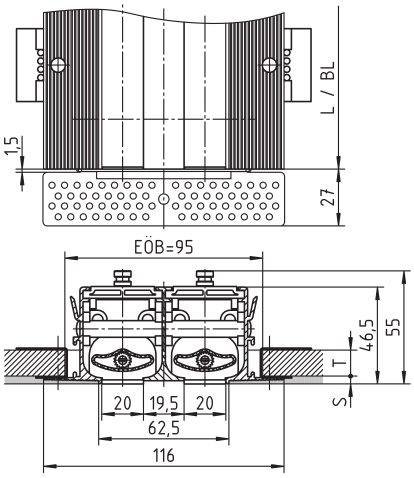

DSCPL - Slot diffuser for plasterboard ceilings

Return air (-A):

DSCPL-1-A (1-slot)

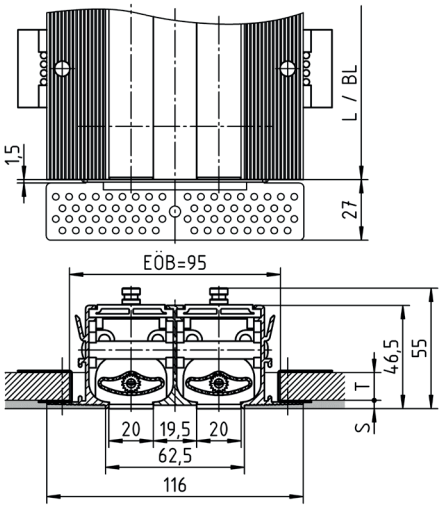

DSCPL-2-A (2-slot)

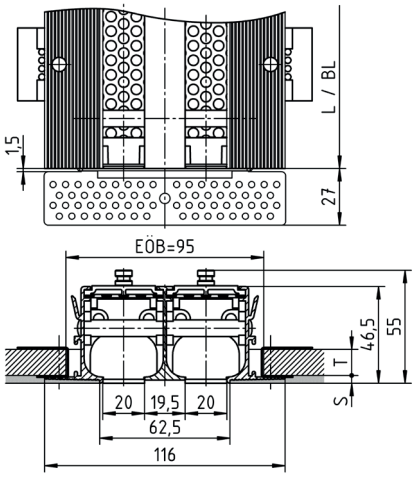

Dimensions of accessories

Plenum box (-ASK-25)

Box mounted without diffuser mounting (-OM)

With lateral spigot (-S1, standard)

DSCPL-...-ASK-25-...-N-...-S1

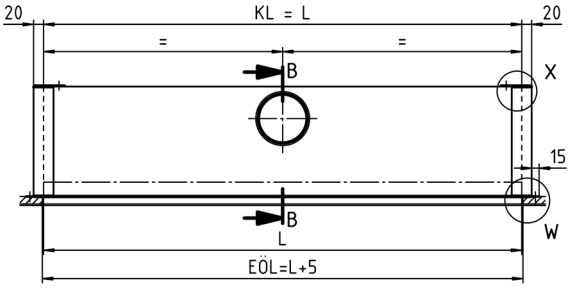

Section B-B

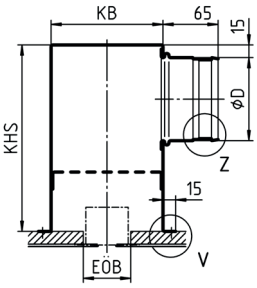

Available sizes for plenum box (-ASK-25-...-N)

	EÖB	KHS	Length					
			L ≤ 1000			1000 < L ≤ 1500		
			ØD	KB		ØD	KB	
				-S1	-S0 -S4		-S1	-S0 -S4
DSCPL-1	56	220	1 x Ø98	132	157	1 x Ø123	132	157
DSCPL-2	95	280	1 x Ø138	172		1 x Ø138	172	

L	EÖL	KL	Weight (kg)	
			DSCPL-1	DSCPL-2
1000	1005	1000	4,5	5,5
1500	1505	1500	6.8	8.3

DSCPL - Slot diffuser for plasterboard ceilings

Spigot position

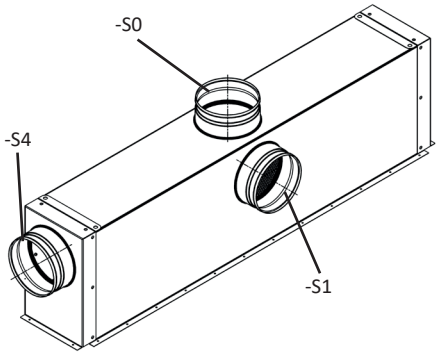

Spigot position in the plenum box, single design:
S0 = 1 spigot from above, in the sheet housing case (in centre of box length KL).
S1 = 1 lateral spigot, in the sheet housing case (in centre of box length KL), standard.
S4 = 1 spigot, front side, at the front of the housing (in centre of box width KB).

DSCXL - Slot diffuser for plasterboard ceilings

Properties

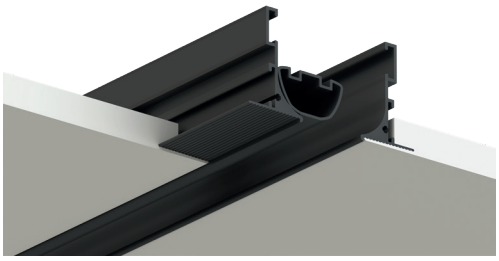

- The slot diffuser type DSCXL is suitable for use in rooms with a height between 2.6 m and 4 m for direct installation in plasterboard ceilings or ceiling cavities (pressure ceilings).
- The special shape of the frame profile allows good installation in the plasterboard ceiling.
- The outer profile allows overfilling so that only the blades are visible.
- Frame is made of untreated aluminium.
- Diffuser fastened with screw mounting (-SM).
- Band design also available.

Quick selection

DSCXL length 1 m with standard connection with blades
Assumptions: distance 3 m - with Coanda effect - one-way throw - ΔT cooling = 10 K

V_{Sup}		Δp_t (Pa)	L_{WA} [dB(A)]
(m³/h)	[l/s]		
200	56	17	27
250	69	27	33
300	83	39	36
350	97	53	39
400	111	69	42
450	125	88	46

DSCXL length 1 m with standard connection without blades
Assumptions: distance 3 m - with Coanda effect - one-way throw - ΔT cooling = 10 K

V_{Sup}		Δp_t (Pa)	L_{WA} [dB(A)]
(m³/h)	[l/s]		
200	56	12	< 20
250	69	18	25
300	83	27	30
350	97	37	35
400	111	48	38
450	125	60	42

Dimensions

supply air (-Z)
DSCXL-1-Z (1-slot)

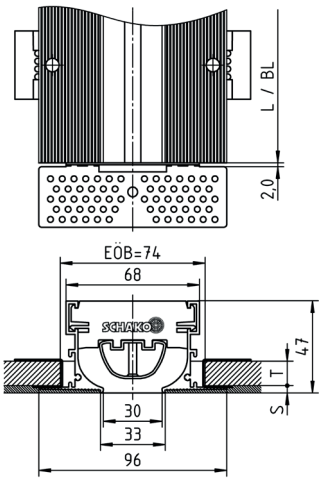

return air (-A)
DSCXL-1-A (1-slot)

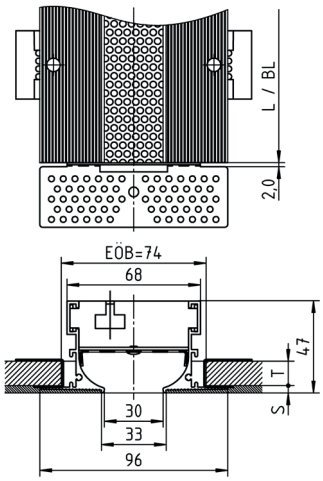

DSCXL - Slot diffuser for plasterboard ceilings

Dimensions of accessories

Plenum box (-ASK-27)

Box mounted without diffuser mounting (-OM).

With lateral spigot (-S1, standard)

DSCXL-1-...-ASK-27-1-N-...-S1

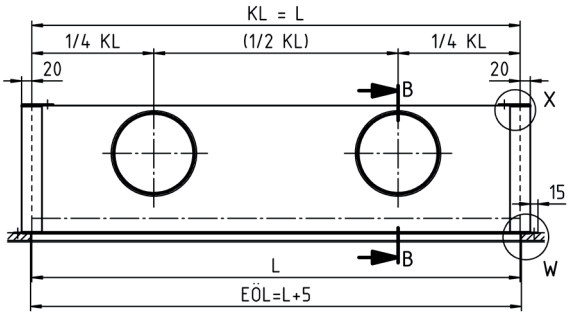

Section B-B

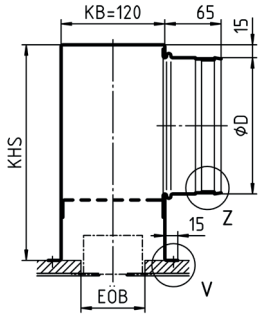

Available sizes for plenum box (-ASK-27-1-N)

L	EÖL	KL	KHS	KB		ØD	(kg)
				-S1	-S0/-S		
1000	1005	74	250	120	192	Ø158	4.9
1500	1505	74	250	120	192	Ø158	7.7

Number of connection spigots and spigot diameter øD

ØD		
L ≥ 400 to L ≤ 500	L > 500 to L ≤ 1000	L > 1000 to L ≤ 1500
1 x Ø158	2 x Ø158	3 x Ø158

Spigot position

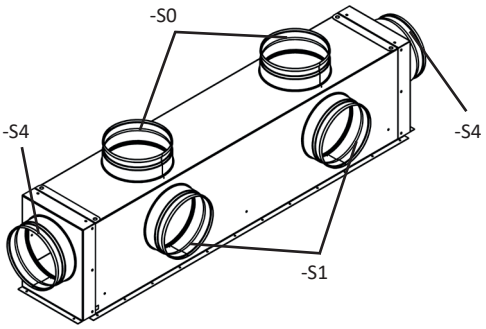

Spigot position in the plenum box, single design:
S0 = 2 spigots, from above, in the sheet housing case, standard.
S1 = 2 lateral spigots, in the sheet housing case, standard.
S4 = 1 spigot front side at the front of the housing (one left + one right) (in centre of box width KB).

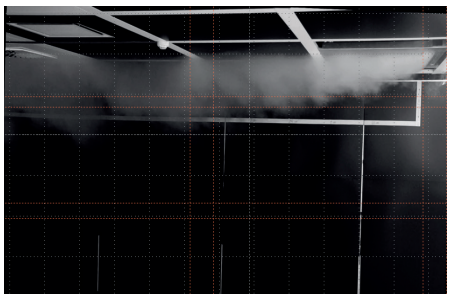

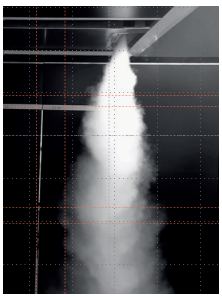

DSCU - Curved slot diffuser

Properties

- For use in rooms from 2.6 m to 4 m high.
- A varied throw direction setting thanks to the air deflection blades adjustable from below.
- Use for cooling to $\Delta T_0 \leq -8$ K.
- Available with 1, 2 or 3 slots.
- For visible installation in ceilings.
- Band design also available.

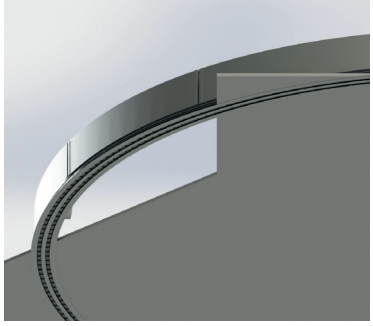

Quick selection

Assumptions: sound power levels - installation height 3 m - blowing out on one side - ΔT cooling = -8 K

1000 mm	Air volume (m^3/h)	Sound power level [dB(A)]	Pressure loss (Pa)	Throw distance X (m)	Distance Y (m)	v_{mean} (m/s)	Temp. difference (K)	Critical throw (m)	TV
DSCU-1-Z	150	40	52	6	1.2	0.17	8	7.5	0.07
	130	35	37	6	1.2	0.14	8	6	0.07
	110	30	26	4.7	1.2	0.13	8	4.7	0.08
	90	25	18	3.8	1.2	0.12	8	3.8	0.09
DSCU-2-Z	240	40	41	6	1.2	0.19	8	6.8	0.1
	200	35	29	5.4	1.2	0.16	8	5.4	0.1
	170	30	20	4.3	1.2	0.14	8	4.3	0.11
	140	25	14	3.4	1.2	0.13	8	3.4	0.13
DSCU-3-Z	280	40	38	5.6	1.2	0.18	8	5.6	0.13
	240	35	27	4.5	1.2	0.16	8	4.5	0.14
	200	30	19	3.5	1.2	0.14	8	3.5	0.15
	170	25	13	2.8	1.2	0.13	8	2.8	0.17

Dimensions

Standard frame profile "R0"

DSCU-1-Z (supply air, 1-slot)

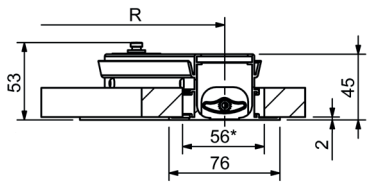

DSCU-2-Z (supply air, 2-slot)

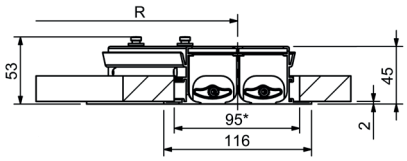

DSCU-3-Z (supply air, 3-slot)

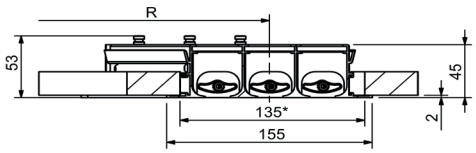

DSCU-1-A (return air, 1-slot)

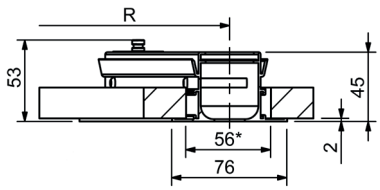

DSCU-2-A (return air, 2-slot)

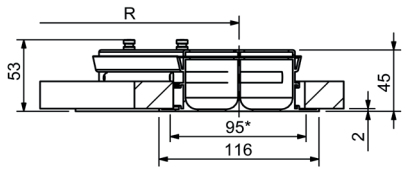

DSCU-3-A (return air, 3-slot)

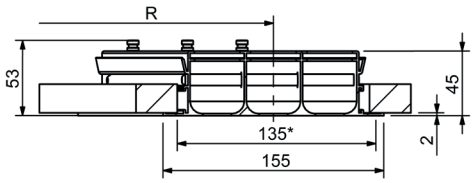

In the return air model, a perforated plate is mounted instead of the air deflection blades.

DSCU - Curved slot diffuser

Dimensions of accessories

Plenum box (-ASK-45-...-N-...-FV-S1-...)

- With fixed connection.
- With inner lateral spigot.
- The slot diffuser is permanently connected to the plenum box.

With inner lateral spigot (-S1, standard)

DSCU-1-...-ASK-45-1-...N-...-FV-S1-...

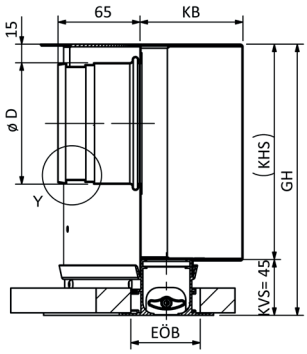

DSCU-2/3-...-ASK-45-2/3-...-N-...-FV-S1-...

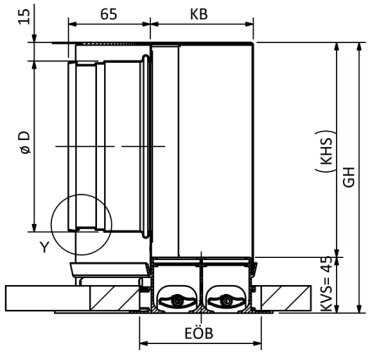

Available plenum box sizes (ASK-45-...-N-...-FV-...-S1-...)

	KB	GH	KH	EÖB	ØD BoL ≤ 1000	ØD BoL > 1000
DSCU-1	83	220	175	56	1 x Ø98	1 x Ø123
DSCU-2	83	220	175	95	1 x Ø138	1 x Ø138
DSCU-3	122	220	175	135	1 x Ø138	1 x Ø138

BoL	EÖBoL ...-R0	KBoL	Weight (kg) DSCU-1	Weight (kg) DSCU-2	Weight (kg) DSCU-3
1000	1010	997	5.71	6.40	7.99
1500	1510	1497	8.27	9.24	11.25

DSCU - Curved slot diffuser

Spigot position

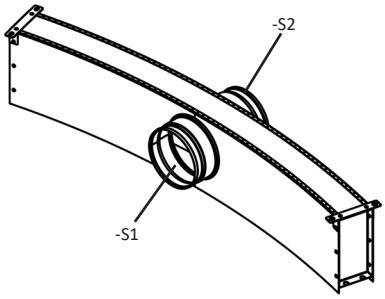

S1 = inner lateral spigot, standard.
S2 = outer lateral spigot.

Inner lateral spigot (-S1)
View A/with 1 spigots
DSCU-1/DSCU-2: BoL = ≥ 400 mm to ≤ 1500 mm
DSCU-3: BoL = ≥ 400 mm to ≤ 1000 mm

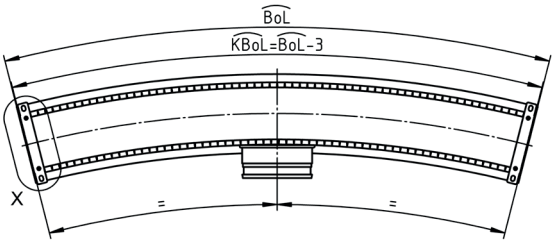

View A/with 2 spigots
DSCU-1/DSCU-2: --
DSCU-3: BoL = ≥ 1000 mm to ≤ 1500 mm

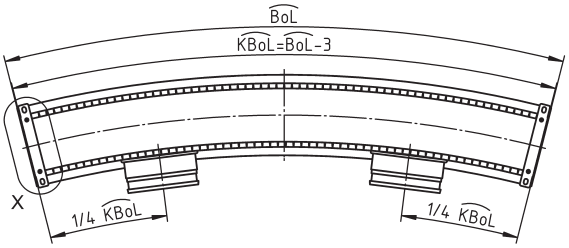

DSCP - Curved slot diffuser for plasterboard ceilings

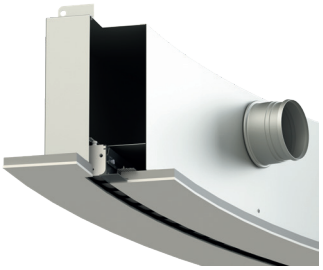

Properties

- For use in rooms with a height between 2.6 m and 4 m for direct installation in plasterboard ceilings or ceiling cavities (pressure ceilings).
- The outer profile allows overfilling so that only the blades are visible.
- A varied throw direction setting thanks to the air deflection blades adjustable from below.
- Use for cooling to $\Delta T_0 \leq -8$ K.
- Available with 1 or 2 slots.
- Band design also available.

Quick selection

DSCP-1 (1-slot)				DSCP-2 (2-slot)			
V_{Sup}		L_{WA} [dB(A)]	Δ_{Pt} (Pa)	V_{Sup}		L_{WA} [dB(A)]	Δ_{Pt} (Pa)
(m³/h)	[l/s]			(m³/h)	[l/s]		
60	16.7	< 20	5	100	27.8	< 20	5
80	22.2	21	8	130	36.1	22	8
100	27.8	28	13	160	44.4	28	13
120	33.3	33	17	200	55.6	35	17

Dimensions

Supply air (-Z)

DSCP-1-Z (1-slot)

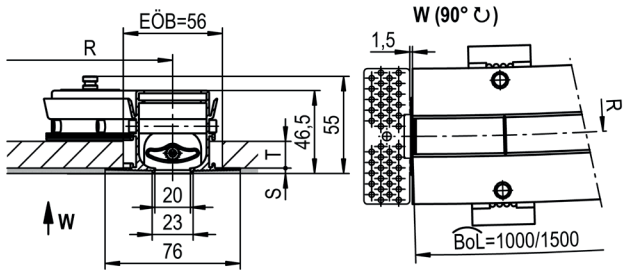

DSCP-2-Z (2-slot)

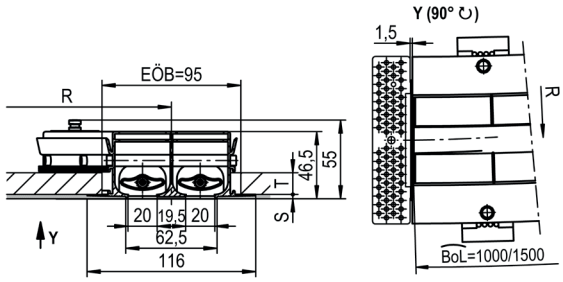

Return air (-A)

DSCP-1-A (1-slot)

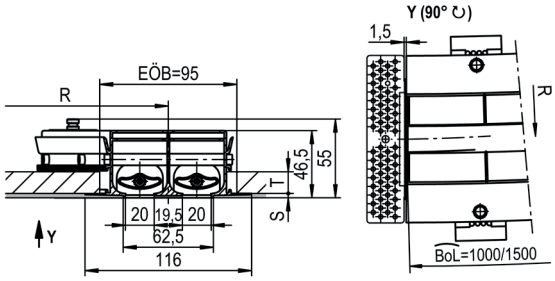

DSCP-2-A (2-slot)

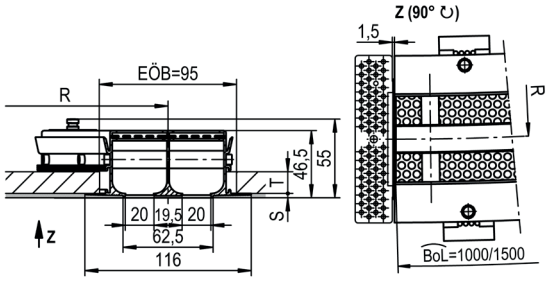

DSCP - Curved slot diffuser for plasterboard ceilings

Dimensions of accessories

Plenum box (-ASK-46-...-N-...)

Box mounted without diffuser mounting (-OM).

With inner lateral spigot (S-1, standard)
DSCP-...-ASK-46-...-S1

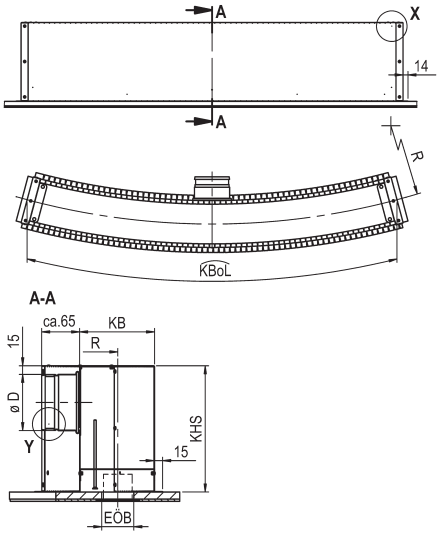

Available sizes for plenum box (-ASK-46-...-N)

	EÖBoL	KB		KHS	ØD	
					KBoL	
		-S0	-S1 -S2		≤ 1040	> 1040 ... ≤ 1540
DSCP-1	56	157	132	220	Ø98	Ø123
DSCP-2	95	172	172	280	Ø138	Ø138

BoL	EÖBoL	KBoL	Weight (kg)	
			DSCP-1	DSCP-2
1000	1005	1040	4.5	5.5
1500	1505	1540	6.8	8.3

Spigot position

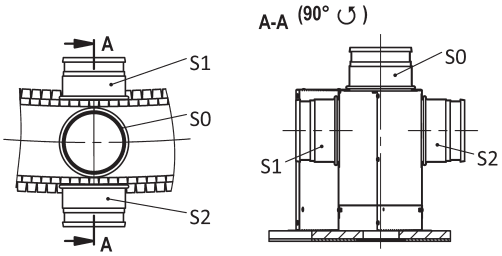

S0 = spigot from above.
S1 = inner lateral spigot, standard.
S2 = outer lateral spigot.

FBS - Floor slot diffuser

Properties

- Adjustable air deflection blades for optimum adjustment to the room.
- High air volumes at low sound power level.
- High vertical throw at high ΔT.
- Fast reduction in temperature and flow velocity.

Quick selection

Assumptions: L = 1000, damper OPEN, at L_{WA} = 35 [dB(A)]

V_{Sup}	FBS-AU	FBS-SS
(m^3/h)	188	223
[l/s]	52	62

Dimensions

FBS-AU

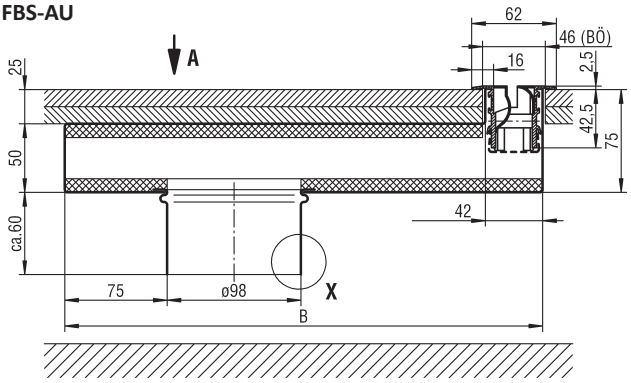

L2 = Floor opening lengthwise
BÖ = Floor opening

View A

for supply or return air

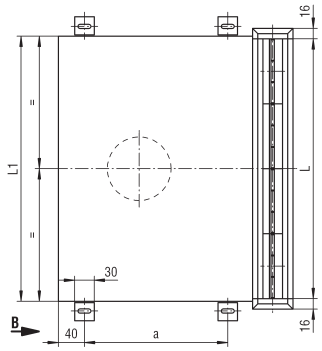

for supply and return air (-Z/A)

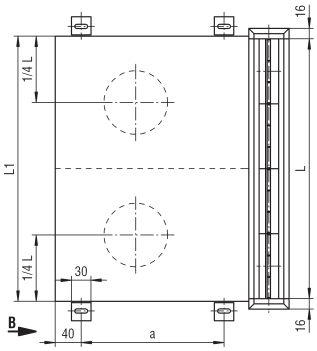

View B

Fixing lug

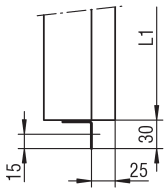

Available sizes FBS-AU

L	L1	L2
500	508	512
1000	1008	1012

B	a
350	220
450	320

FBS - Floor slot diffuser

Dimensions

FBS-SS

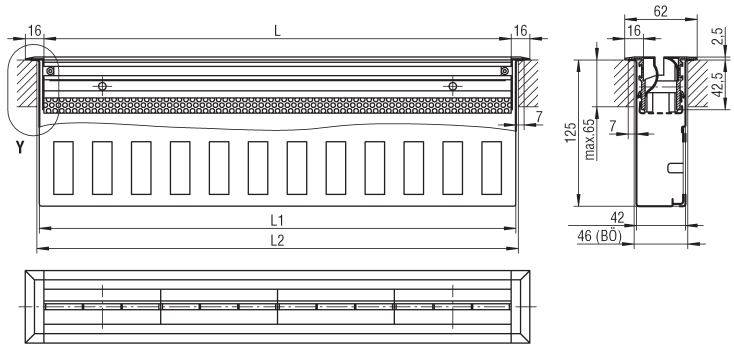

L2 = Floor opening lengthwise
BÖ = Floor opening

Available sizes FBS-SS

L	L1	L2
500	508	512
1000	1008	1012

DSX - Ceiling slot diffuser

Properties

- The small space requirement of 18 mm per slot ensures easy integration into all types of ceilings (different frame profiles).
- Depending on the installation, the blade position can guide the air flow horizontally to the left or right, or vertically.
- Suitable for variable volumetric flows and large ΔT.
- Constant pressure loss and sound power level depends on blade alignment.
- Frame in all RAL colours, blades in RAL 9005 or RAL 9010.
- Band design also available.

Quick selection

DSX length 1 m

Assumptions: installation height 3 m - with Coanda effect - one-way throw - ΔT cooling = 10 K

Number of blades	L_{WA} [dB(A)]	V_{Sup} (m^3/h)	Δp_t (Pa)	x (m)	v_{mean} (m/s)	I	TV
1	35	81	28	3.1	0.11	18.80	0.06
	30	65	18	2.7	0.09	17.90	0.07
	25	51	11	2.3	0.07	16.90	0.07
2	35	145	30	4.4	0.13	15.10	0.08
	30	114	18	3.8	0.11	14.30	0.08
	25	89	11	3.2	0.09	13.40	0.09
3	35	149	19	4.1	0.11	12.00	0.10
	30	123	13	3.6	0.10	11.40	0.10
	25	101	10	3.2	0.08	10.90	0.11
4	35	199	23	5.1	0.13	11.20	0.11
	30	162	15	4.4	0.11	10.60	0.11
	25	131	10	3.9	0.09	10.10	0.12

Dimensions

Narrow frame profile "S0" (standard)

For invisible installation in the joint of panelled ceilings.

DSX-1-...-S0 DSX-2-...-S0 DSX-3-...-S0 DSX-4-...-S0

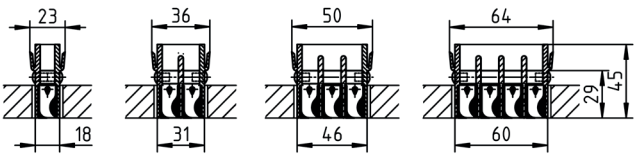

Frame profile "P0" (with support profile)

For visible installation in panelled ceilings.

DSX-1-...-P0 DSX-2-...-P0 DSX-3-...-P0 DSX-4-...-P0

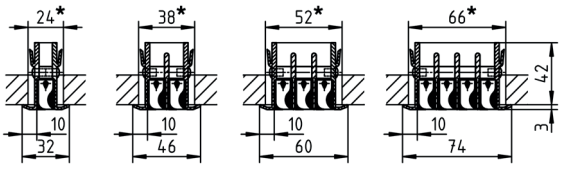

Frame profile "PB" (with support profile)

For visible installation in panelled ceilings.

DSX-1-...-PB DSX-2-...-PB DSX-3-...-PB DSX-4-...-PB

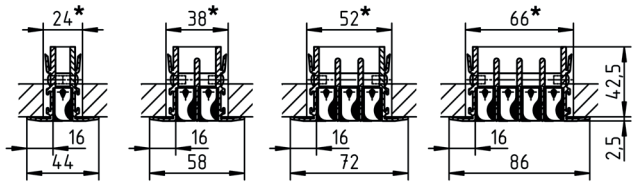

DSX - Ceiling slot diffuser

Dimensions of accessories

Plenum box (-ASK-21-...-N-...-VM-...-S2/S2-...)

With concealed mounting. With lateral spigot or lateral spigot located on the opposite side. The slot diffuser is screwed to the plenum box housing (face part) with concealed screws.

With lateral spigot (-S1, standard)
DSX-...-ASK-21-...N-...-VM-...-S1-...

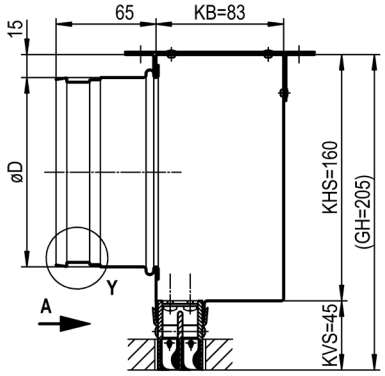

Available sizes (ASK-21-...-N-...-VM-...-S1/S2-...)

	ØD		
	L ≥ 400 to L ≤ 500	L > 500 to L ≤ 1000	L > 1000 to L ≤ 1500
DSX-1	1 x Ø98	1 x Ø98	1 x Ø123
DSX-2	1 x Ø98	1 x Ø123	2 x Ø123
DSX-3	1 x Ø123	1 x Ø123	2 x Ø123
DSX-4	1 x Ø123	2 x Ø123	2 x Ø123

L	KL	EÖL
1000	997	1010
1500	1497	1510

Spigot position

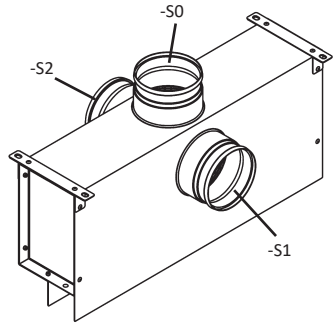

S0 = spigot from above.
S1= inner lateral spigot, standard.
S2 = lateral spigot located on the opposite side.

Lateral spigot (-S1)/lateral spigot located on the opposite side (-S2)

View A/with 1 spigots

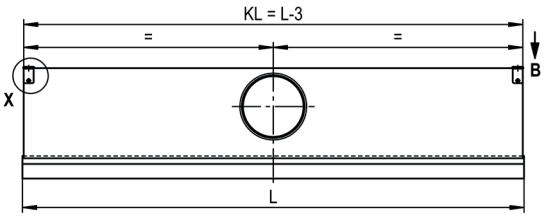

View A/with 2 spigots

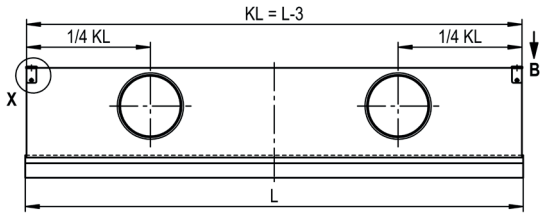

DSXL - Slot diffuser

Properties

- The small space requirement of 33 mm per slot ensures easy integration into all types of ceilings (different frame profiles).
- Depending on the installation position, the blade position can guide the air flow horizontally to the left or right.
- Constant pressure loss/sound power level do not depend on the direction of the blades.
- Band design also available.

Quick selection

DSXL length 1 m

Assumptions: installation height 3 m - with Coanda effect - one-way throw - ΔT cooling = 10 K

Number of blades	L_{WA} [dB(A)]	V_{Sup} (m³/h)	Δp_t (Pa)	x (m)	v_{mean} (m/s)	I	TV
1	35	174	33	2.8	0.08	7.3	0.13
	30	146	24	2.2	0.07	6.5	0.15
	25	123	17	1.8	0.06	5.9	0.17
2	35	289	32	3.2	0.12	5.7	0.17
	30	245	23	2.6	0.10	5.1	0.19
	25	209	17	2.1	0.09	4.6	0.21
3	35	426	24	3.2	0.13	6	0.16
	30	364	17	2.6	2.60	5.3	0.18
	25	311	12	2.1	0.10	4.8	0.2
4	35	491	19	3.8	0.12	4.5	0.21
	30	416	14	3.1	0.11	4	0.24
	25	353	10	2.5	0.09	3.6	0.27

Dimensions

Narrow frame profile "S0" (standard)

For invisible installation in the joint of panelled ceilings.

DSXL-1-...-S0

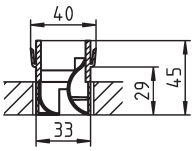

DSXL-2-...-S0

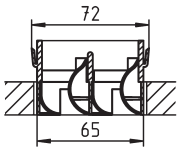

DSXL-3-...-S0

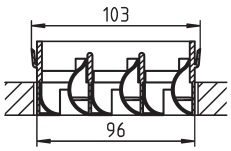

DSXL-4-...-S0

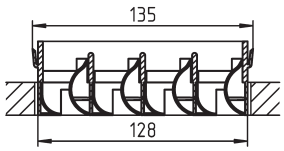

Frame profile "P0" (with support profile)

For visible installation in panelled ceilings or closed ceiling systems.

DSXL-1-...-P0

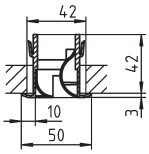

DSXL-2-...-P0

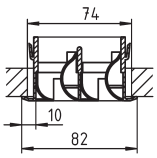

DSXL-3-...-P0

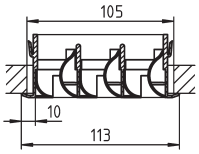

DSXL-4-...-P0

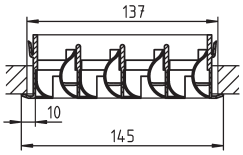

Frame profile "PB" (with support profile)

For visible installation in panelled ceilings or closed ceiling systems.

DSXL-1-...-PB

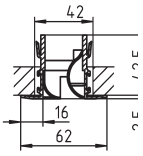

DSXL-2-...-PB

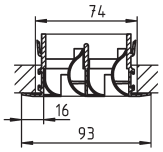

DSXL-3-...-PB

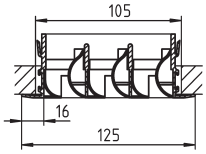

DSXL-4-...-PB

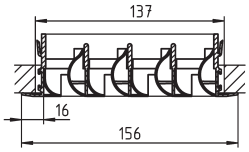

DSXL - Slot diffuser

Dimensions of accessories

Plenum box type ASK for DSXL-...

With concealed mounting. With lateral spigot or lateral spigot located on the opposite side. The slot diffuser is screwed to the plenum box housing (face part) with concealed screws.

With lateral spigot (-S1, standard)

DSXL-1/2-...-ASK-22-...-N-...-VM-...-S1-... (1 + 2-slot)

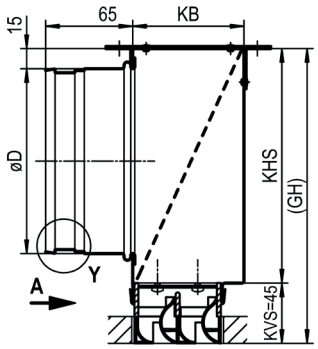

DSXL-3/4-...-ASK-22-...-N-...-VM-...-S1-... (3 + 4-slot)

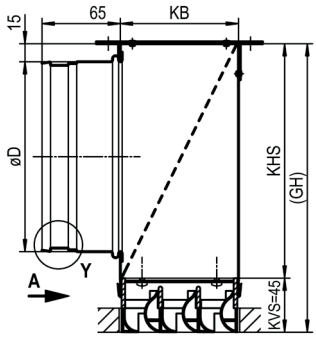

Available sizes (ASK-22-...-N-...-VM-...-S1/S2-...)

	KB	GH	KH	ØD		
				L ≥ 400 to L ≤ 500	L > 500 to L ≤ 1000	L > 1000 to L ≤ 1500
DSXL-1	83	240	175	1 x Ø138	1 x Ø138	2 x Ø138
DSXL-2	83	240	175	1 x Ø138	2 x Ø138	2 x Ø138
DSXL-3	98	240	195	1 x Ø158	2 x Ø158	3 x Ø158
DSXL-4	130	280	235	1 x Ø198	2 x Ø198	3 x Ø198

L	KL	EÖL
1000	997	1010
1500	1497	1510

DSXL - Slot diffuser

Spigot position

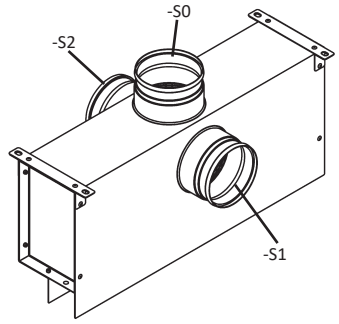

S0 = spigot from above.
S1 = lateral spigot, standard.
S2 = lateral spigot located on the opposite side.

Lateral spigot (-S1)/lateral spigot located on the opposite side (-S2)

View A/with 1 spigots

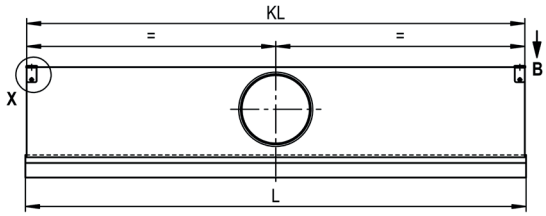

View A/with 2 spigots

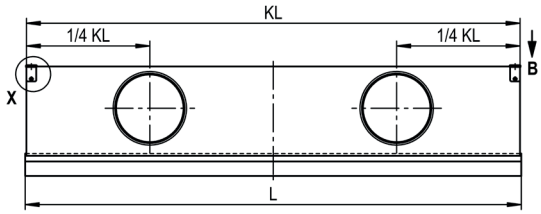

View A/with 3 spigots

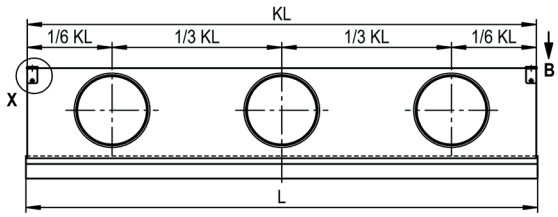

DSXW - Wall slot diffuser

Properties

- Wall diffuser with narrow slots, with different frame profiles.
- Flush installation possible.
- Makes it possible to achieve a Coanda effect.
- Blades available in RAL 9010/RAL 9005.
- The profile is available in all RAL colours.
- Band design also available.

Quick selection

DSXW length 1 m

Assumptions: installation height 3 m - with Coanda effect - ΔT cooling = 10 K

Number of blades	L_{WA} [dB(A)]	V_{Sup} (m^3/h)	Δp_t (Pa)	x (m)	v_{mean} (m/s)	I	TV
1	35	149	46	5	0.13	14.5	0.06
	30	126	33	4.4	0.11	13.4	0.07
	25	107	24	3.8	0.1	12.3	0.08
2	35	282	32	5.6	0.15	11.1	0.08
	30	235	22	4.8	0.13	10	0.08
	25	196	15	4.1	0.11	9.1	0.1

Dimensions

Narrow frame profile "S0" (standard)

For invisible installation.

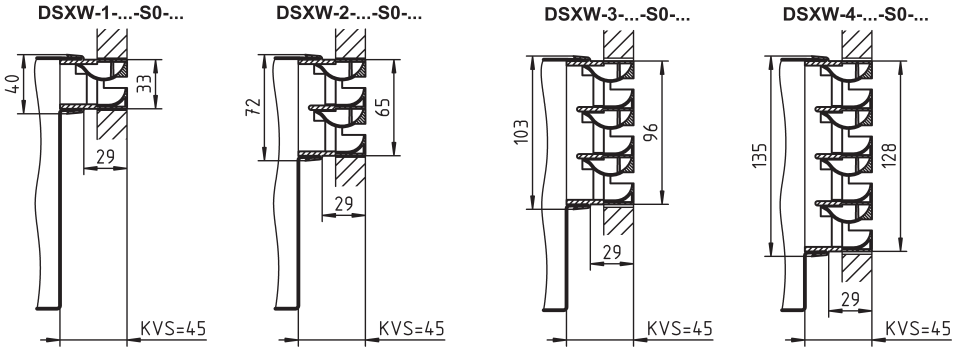

Frame profile "P0" (with support profile)

For visible installation.

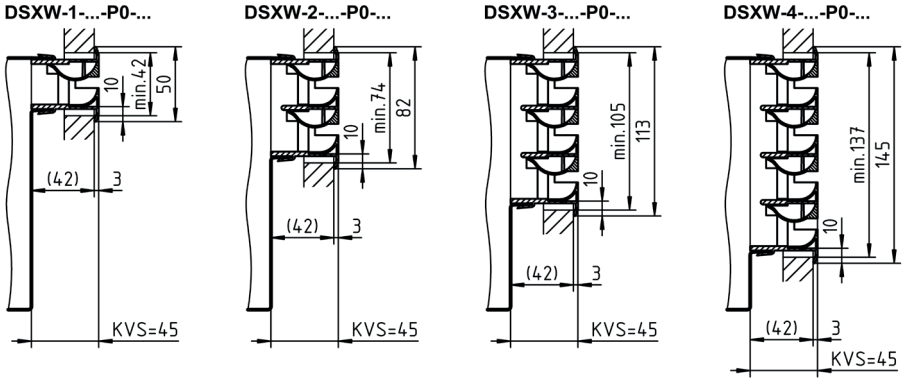

DSXW - Wall slot diffuser

Frame profile "PB" (with support profile)
For visible installation.

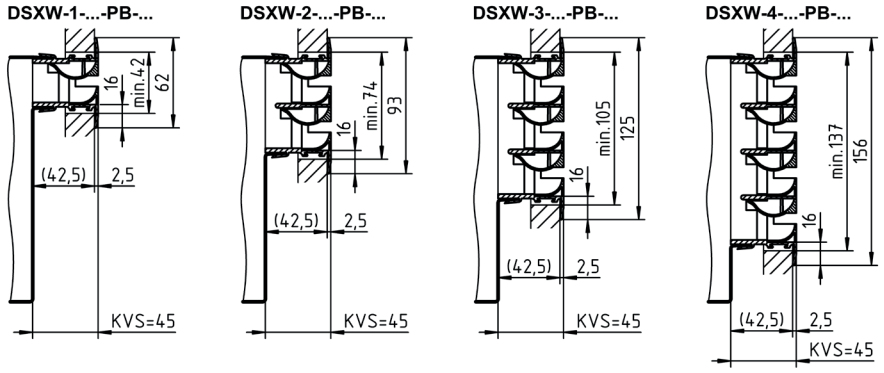

Dimensions of accessories

Plenum box (-ASK-23-...-N-...-VM-...-S1-...)
With concealed mounting. With lateral spigot. The slot diffuser is screwed to the plenum box housing (face part) with concealed screws.

With lateral spigot (-S1, standard)
DSXW-...-ASK-23-...-N-...-VM-...-S1-...

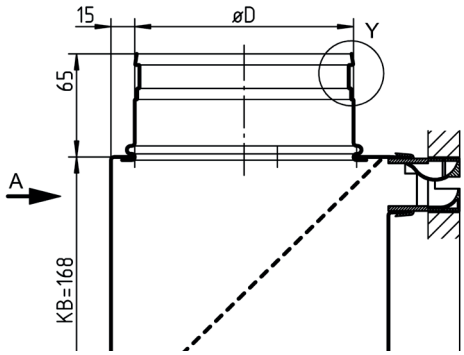

Available plenum box sizes (-ASK-23-...-N-...-VM-...-S1-...)

	ØD					
	L ≥ 400 to L ≤ 500		L > 500 to L ≤ 1000		L > 1000 to L ≤ 1500	
	KB	ØD	KB	ØD	KB	ØD
DSXW-1	168	1 x Ø138	168	1 x Ø138	168	2 x Ø138
DSXW-2	168	1 x Ø138	168	1 x Ø138	168	3 x Ø138
DSXW-3	188	1 x Ø158	188	1 x Ø158	188	3 x Ø158
DSXW-4	228	1 x Ø158	228	1 x Ø198	228	3 x Ø198

L	KL	EÖL
1000	997	1010
1500	1497	1510

DSXW - Wall slot diffuser

Spigot position

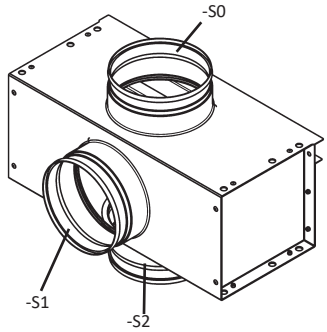

S0 = spigot from above.
S1 = lateral spigot, standard.
S2 = spigot from below.

Lateral spigot (-S1)
View A/with 1 spigots

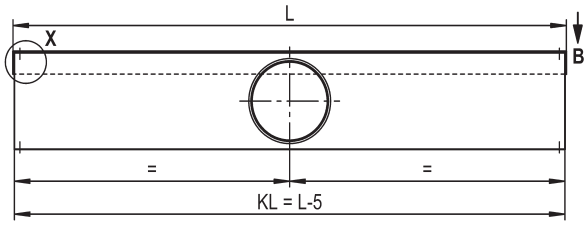

View A/with 2 spigots

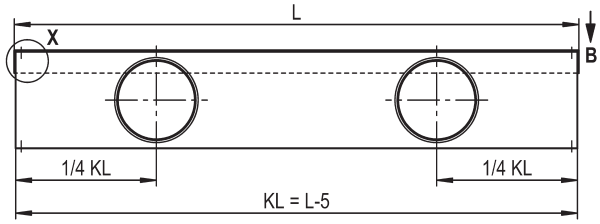

View A/with 3 spigots

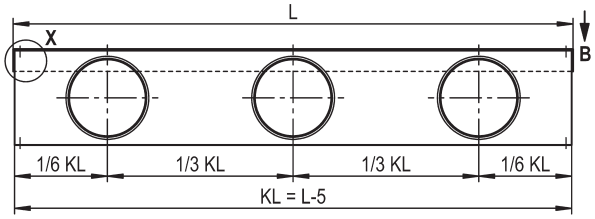

KWB - Combined supply and return air diffuser

Properties

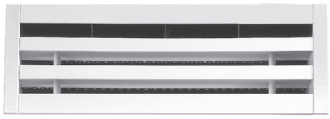

- One-piece wall diffuser with a thermally separate plenum box for supply and return air.
- Optimum room flow, which ensures air is distributed uniformly in the entire room.
- Installation in a wall.

Quick selection

KWB-D

Assumptions: supply air sound power level 30 dB(A) - jet path X+Y = 5.2 m - ΔT cooling = -8 K

Length	Nozzles blades	Air volume (m^3/h)	Sound power level [dB(A)]	Pressure loss (Pa)	Throw distance X+Y (m)	Max. jet velocity (m/s)	Temp. difference (K)	Crit. throw (m)	TV	Induction
600	1	70	30	22	5.2	0.2	8	4	0.06	15.9
600	2	140	30	29	5.2	0.2	8	3.9	0.06	15.9
800	1	100	30	21	5.2	0.21	8	4.8	0.06	15.9
800	2	190	30	29	5.2	0.2	8	4.4	0.06	15.9
1000	1	100	30	21	5.2	0.17	8	3.1	0.06	15.9
1000	2	230	30	29	5.2	0.2	8	3.9	0.06	15.9
1200	1	120	30	22	5.2	0.18	8	4.5	0.06	15.9
1200	2	280	30	29	5.2	0.2	8	5.3	0.06	15.9

KWB-S

Assumptions: supply air sound power level 30 or 35 dB(A) - throw X+Y = 4.5 m or 5.1 m - ΔT cooling = -8 K, diagonal throw

Length	Air volume (m^3/h)	Sound power level [dB(A)]	Pressure loss (Pa)	Throw distance X+Y (m)	v_{mean} (m/s)	Temp. difference (K)	Crit. throw (m)	TV	Induction
600	48	30	21	4.5	0.16	8	3.4	0.08	12.4
600	58	35	30	5.1	0.18	8	4.3	1.08	13.2
800	65	30	21	4.5	0.16	8	3.4	2.08	12.4
800	78	35	30	5.1	0.19	8	4.3	3.08	13.2
1000	81	30	21	4.5	0.16	8	3.4	4.08	12.4
1000	97	35	30	5.1	0.18	8	4.3	5.08	13.2
1200	97	30	21	4.5	0.16	8	3.4	6.08	12.4
1200	116	35	30	5.1	0.18	8	4.2	7.08	13.2

KWB - Combined supply and return air diffuser

Dimensions

KWB-D-1/-2

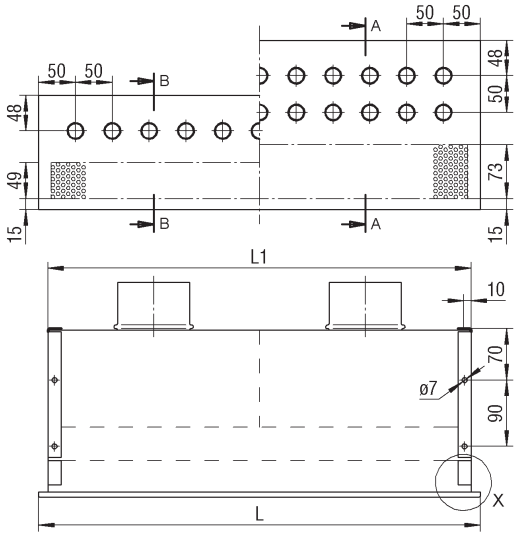

Section A-A/for supply air

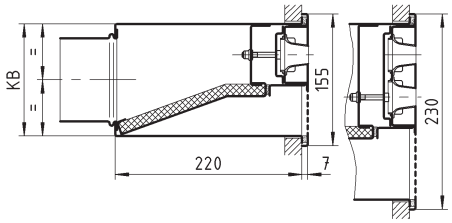

Section B-B/for return air

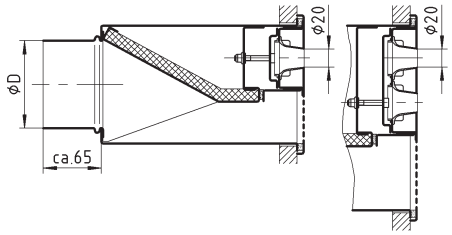

Available sizes KWB-D

NW	Nozzles/ rows	KWB-D-1		KWB-D-2		L	L1
		ØD	KB	ØD	KB		
600	11	98	132	158	207	600	575
800	15	98	132	158	207	800	775
1000	19	98	132	158	207	1000	975
1200	23	2 x 98	132	158	207	1200	1175

Spigot position KWB-D

with 1 connection spigot each for supply and return air

KWB-D-1 = NW 600-1000

KWB-D-2 = NW 600-1200

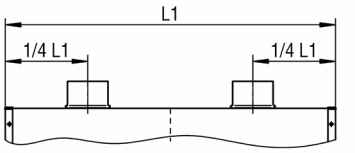

with 2 connection spigot each for supply and return air

KWB-D-1 = NW 1200

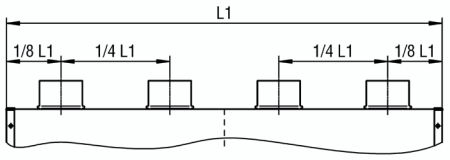

KWB - Combined supply and return air diffuser

Dimensions

KWB-KL

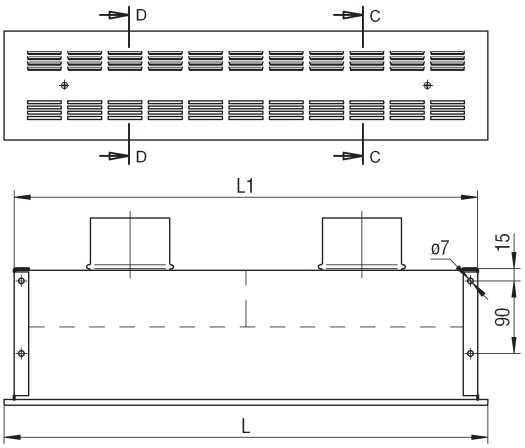

Section C-C/for supply air

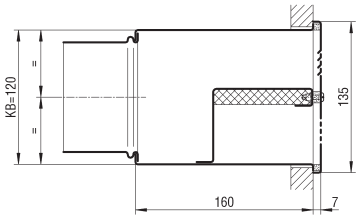

Section D-D/for return air

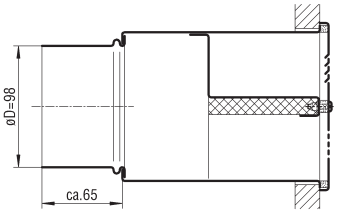

Available sizes KWB-KL

NW	L	L1
600	600	575
800	800	775
1000	1000	975
1200	1200	1175

Spigot position KWB-KL

with 1 connection spigot each for supply and return air
NW 600-1000

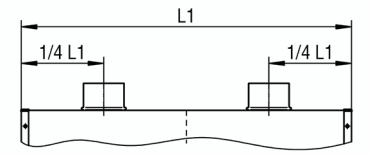

with 2 connection spigot each for supply and return air
NW 1200

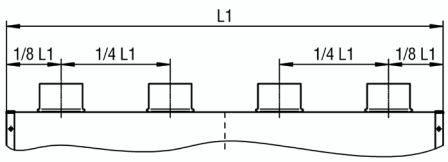

KWB - Combined supply and return air diffuser

Dimensions

KWB-S

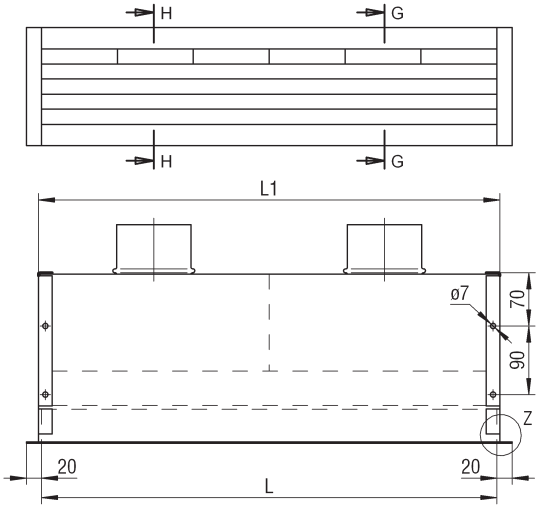

Section G-G/for supply air

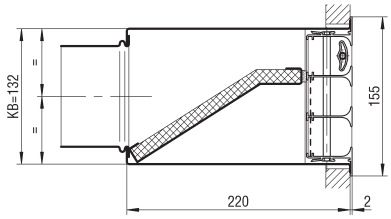

Section H-H/for return air

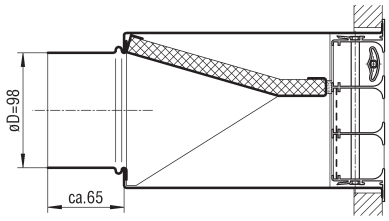

Blade position

Horizontal throw
KWB-S-H

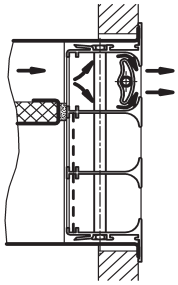

Diagonal throw
KWB-S-S

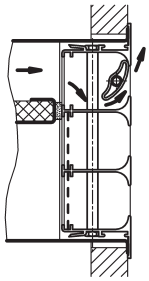

Available sizes KWB-S

NW	L	L1
600	600	608
800	800	808
1000	1000	1008
1200	1200	1208

Spigot position

with 1 connection spigot each for supply and return air
NW 600-1000

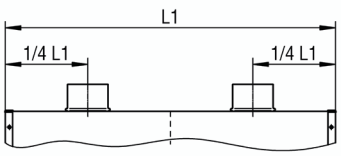

with 2 connection spigot each for supply and return air
NW 1200

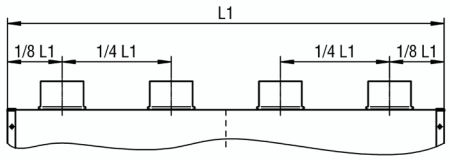

Nozzles, long throw nozzle grilles and diffusers for large rooms

DSA - Nozzle jet diffuser

Properties

- Air flow's long range and very high induction.
- Ideal for installation across glass surfaces. The diffuser can be seamlessly integrated into the architecture.
- Fixed or adjustable nozzles and faceplate, white RAL 9010, black RAL 9005 or grey RAL 9006 (possible at extra charge).
- Faceplate in RAL of choice.
- Painted cover plate possible (for fixed nozzles only).
- Installation on wall or ceiling.
- **DSA-F0 and DSA-D0:** linear with fixed nozzle row.
- **DSA-V0 and DSA-VD:** with individually adjustable nozzles.
- Band design also available.

Quick selection

DSA-F0 length 1 m
Assumptions: 35 dB(A) - ΔT heating = 10 K

Nozzle rows	V_{Sup} (m³/h)	Δp_t (Pa)	Y_h
1	193	79	8,5
2	305	37	9.1

DSA-V0 or DSA-VD

Mod.	S	V_{Sup} (m³/h)	Δp_t (Pa)	L_{WA} [dB(A)]	Δt_H	Y_h
DSA-V0	**1**	134	51	35	10	5.2
DSA-V0	**2**	210	21	35	10	5.5

Dimensions DSA-F0/V0 (individual length)

DSA-F0-...-N-...-FV with AK-29-...-N-FV-...-S1
(with fixed nozzles, with faceplate riveted to the plenum box, lateral spigot position)

DSA-F0-...-1-...

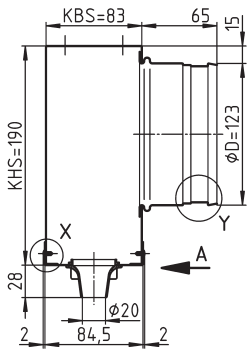

DSA-F0-...-2-...

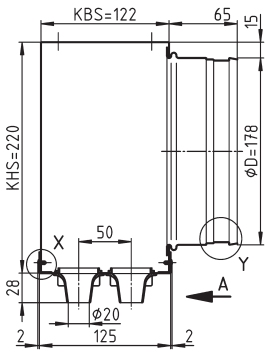

DSA-V0-...-N-...-FV with AK-29-...-N-FV-...-S1
(with manually individually adjustable nozzles, with faceplate riveted to the plenum box, lateral spigot position)

DSA-V0-...-1-...

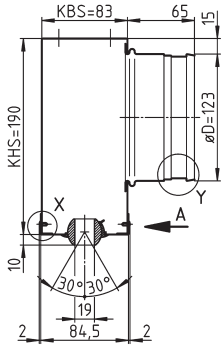

DSA-V0-...-2-...

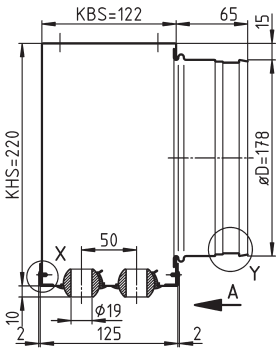

Length view
DSA-F0-...-N-...-AK-29-...-N-FV-...-S1 is shown, valid for all -AK-29

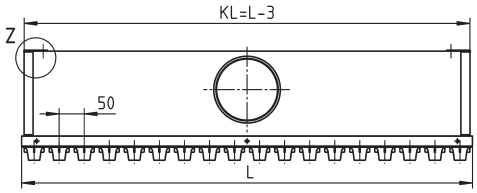

DSA - Nozzle jet diffuser

Available sizes DSA-F0/V0-...-1-...

L	Nozzle blades	KL	ØD (-S1/-S0)	ØD (-4)
600	12	597	123	12
800	16	797	123	123
1000	20	997	123	123
1200	24	1197	2 x 123	158

Available sizes DSA-F0/V0-...-2-...

L	Nozzle blades	KL	ØD (-S1/-S0)	ØD (-4)
600	24	597	178	178
800	32	797	178	178
1000	40	997	178	178
1200	48	1197	2 x 178	198

Spigot position on AK-29

S1 (with 1 lateral spigot)

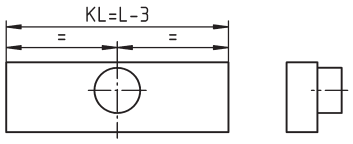

S1 (with 2 lateral spigot)

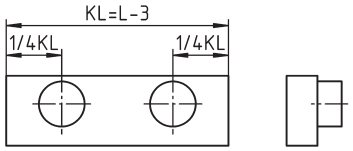

S4 (with 1 front side spigot, not possible for band design)

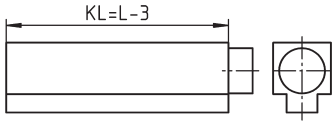

S0 (with 1 spigot from above)

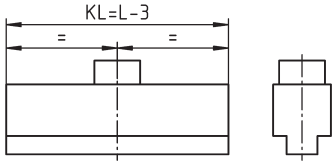

S0 (with 2 spigot from above)

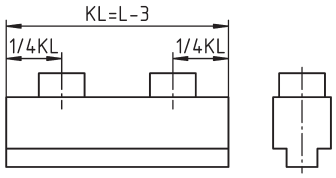

DSA - Nozzle jet diffuser

Dimensions DSA-D0/VD (single length)

DSA-D0-...-N-...-SM with AK-30-...-N-SM-...-S1
(with fixed nozzles, with dismountable faceplate, lateral spigot position)

DSA-D0-...-1

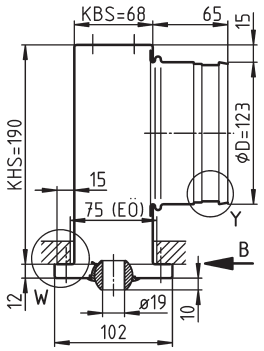

DSA-D0-...-2

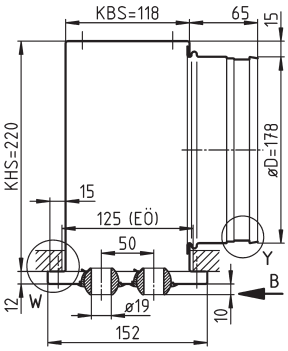

DSA-VD-...-N-...-SM with AK-30-...-N-SM-...-S1
(with manually, individually adjustable nozzles, with detachable faceplate, lateral spigot position)

DSA-VD-...-1

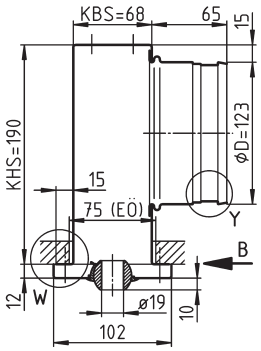

DSA-VD-...-2

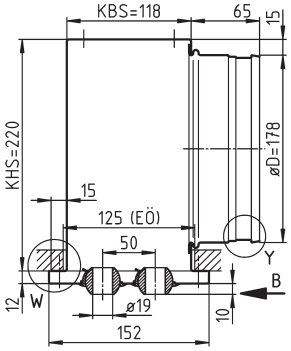

Length view
DSA-D0-...-N-...-AK-30-...-N-SM-...-S1 is shown, valid for all -AK-30

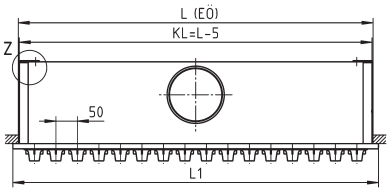

EÖ = Installation opening
KL = length of box

Available sizes DSA-D0/-VD-...-1-...

L	L1	Nozzle blades	KL	ØD (-S1/-S0)	ØD (-S4)
625	650	12	620	123	123
825	850	16	820	123	123
1025	1050	20	1020	123	123
1225	1250	24	1220	2 x 123	158

Available sizes DSA-D0/-VD-...-2-...

L	L1	Nozzle blades	KL	ØD (-S1/-S0)	ØD (-S4)
625	650	24	620	178	178
825	850	32	820	178	178
1025	1050	40	1020	178	178
1225	1250	48	1220	2 x 178	198

DSA - Nozzle jet diffuser

Spigot position on AK-30

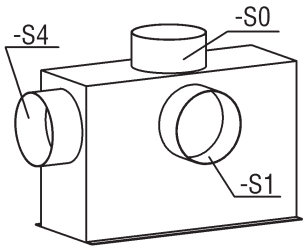

S0 = spigot from above.
S1 = lateral spigot on the box, standard.
S2 = front side spigot, not possible for band design.

S1 (with 1 lateral spigot)

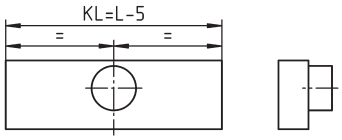

S1 (with 2 lateral spigot)

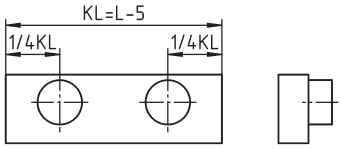

S4 (with 1 front side spigot, not possible for band design)

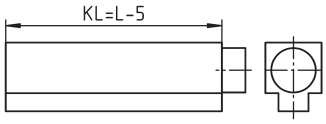

S0 (with 1 spigot from above)

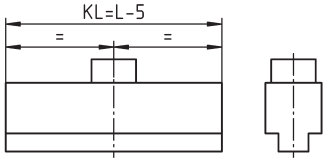

S0 (with 2 spigot from above)

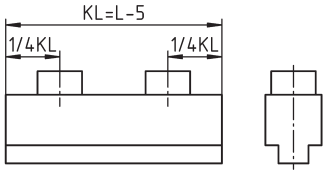

WDA - Long throw nozzle

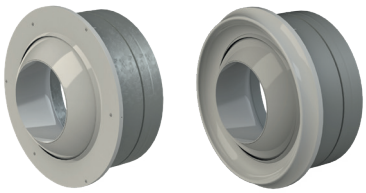

Properties

- Long throw nozzle for air-conditioning large, high rooms.
- Horizontal throw but vertical also possible.
- Volumetric flow/sound power level/pressure loss depend on the direction of the nozzle.
- Swirl discs can be used to reduce the penetration depth.
- Any kind of aesthetic look possible - a wide range of integration solutions available.
- Certified according to ATEX Directive 2014/34/EU.

Quick selection

Assumptions: pressure loss 100 Pa - installation height 6.8 m - cooling = -10 K

Size	DS	V_{Sup} (m³/h)	L_{WA} [dB(A)]	x (m)	v_{mean} (m/s)	I	TV
31	0	33	20	> 8.8	< 0.1	114	0.01
40	0	55	21	11.4	0.09	124	0.01
45	0	70	23	11.83	0.1	113	0.01
50	0	82	25	11.63	0.11	100	0.02
63	0	134	23	12.6	0.12	99	0.02
	1	132	29	12.1	0.1	112	0.01
80	0	212	25	13.6	0.13	84	0.02
	1	204	31	12.2	0.1	101	0.02
	2	186	35	8.2	0.08	113	0.02
87	0	255	26	13.2	0.16	76	0.02
	1	243	33	10.9	0.11	88	0.02
	2	214	40	7.5	0.08	103	0.02
100	0	339	31	14.5	0.16	72	0.02
	1	316	40	11.8	0.11	94	0.02
	2	260	45	7.9	0.07	110	0.02
125	0	554	28	16.2	0.21	57	0.03
	1	546	32	15.1	0.17	67	0.02
	2	538	35	14.2	0.15	71	0.02
160	0	891	32	16.8	0.23	49	0.03
	1	850	38	14.6	0.17	57	0.03
	2	835	43	13.5	0.16	63	0.02
175	0	1032	33	17.2	0.23	47	0.03
	1	970	40	14.1	0.17	54	0.03
	2	941	45	12.9	0.15	62	0.03
200	0	1381	38	17.8	0.28	44	0.04
	1	1259	45	14.1	0.2	52	0.03
	2	1174	50	12.3	0.16	59	0.03
250	0	2404	44	19.4	0.29	40	0.04
	1	1890	53	13.1	0.17	46	0.04
	2	2442	67	14.3	0.14	67	0.04

WDA - Long throw nozzle

Dimensions

without swivel head (-S0)

WDA-N-...

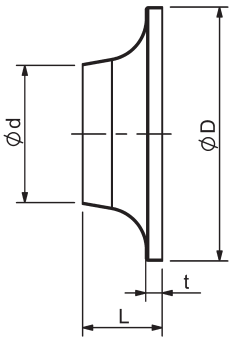

Nozzle without add-on parts
(not available with swivel head)

WDA-W-...

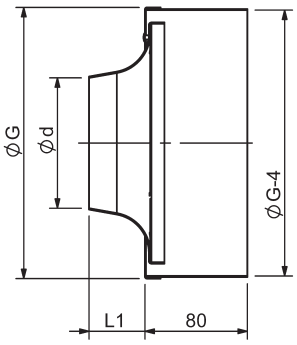

WDA-F-...

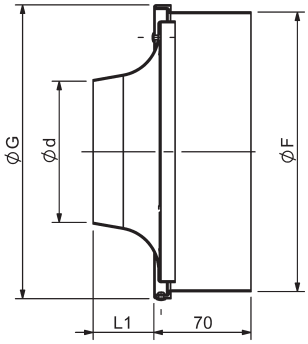

WDA-D-... (not possible for NW 400)

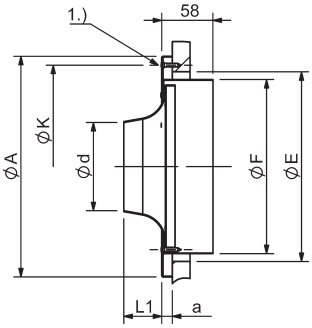

WDA-K-...

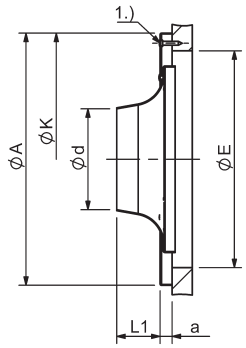

WDA-R-... (not possible for NW 031-050 and NW 400)

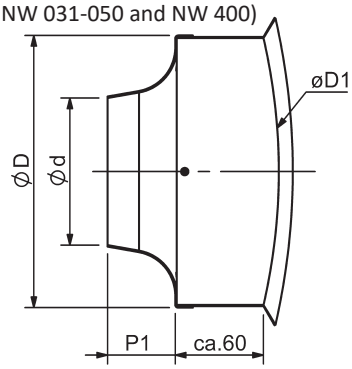

Available sizes

NW	Ød	ØA	ØE	ØF	ØG	ØK	a	L	t	P1	ØD1	ØD	L1
031	31	150	115	98	108	130	9	87	12	-	-	90	72
040	40	150	115	98	108	130	9	63	12	-	-	90	48
045	45	150	115	98	108	130	9	49	10	-	-	90	34
050	50	150	115	98	108	130	9	34.5	10	-	-	90	20
063	63	250	215	198	208	230	12	163	12	151	181-800*	185	148
080	80	250	215	198	208	230	12	114	14	102		185	99
087	87	250	215	198	208	230	12	114	14	83		185	80
100	100	250	215	198	208	230	12	91	12	82		185	43
125	125	450	415	398	408	430	12	192	12	175	356-800*	360	174
160	160	450	415	398	408	430	12	212	12	195		360	192
175	175	450	415	398	408	430	12	168	12	153		360	150
200	200	450	415	398	408	430	12	99	12	84		360	81
250	250	450	415	398	408	430	12	79	12	67		360	64
400	400	845	800	752	808	815	20	340	20	-	-	724	318

Larger diameters are also available upon request.

WDA - Long throw nozzle

Dimensions

SK = with swivel head (not possible with NW 050)

WDA-D-...-SK-... (NW 400 not possible)

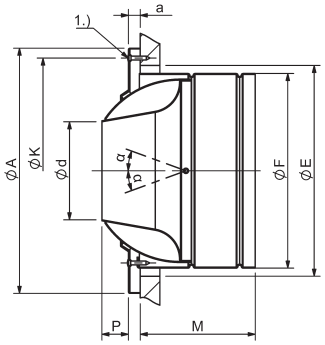

WDA-W-...-SK-...

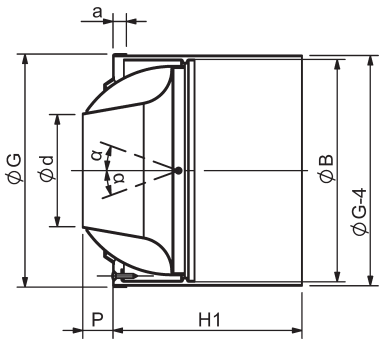

WDA-K-...-SK-...

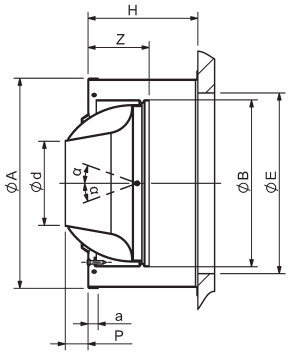

WDA-R-...-SK-... (not possible for NW 031-045 and NW 400)

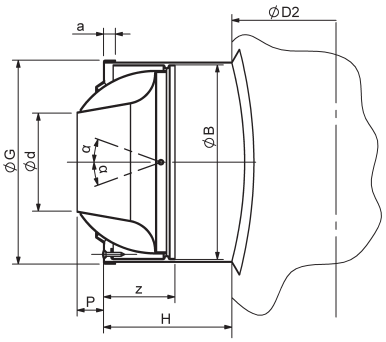

Available sizes

NW	Ød	ØA	ØE	ØF	ØG	ØK	a	α	P	H	H1	M	ØB	z	ØD2
031	31	150	115	98	108	130	9	28	42	62	99	41	102	53	-
040	40	150	115	98	108	130	9	28	18	62	99	41	102	53	-
045	45	150	115	98	108	130	9	28	7	62	99	41	102	53	-
063	63	250	215	198	208	230	12	25	98	131	170	118	197	74	200-1200*
080	80	250	215	198	208	230	12	25	50	131	170	118	197	74	
087	87	250	215	198	208	230	12	25	50	131	170	118	197	74	
100	100	250	215	198	208	230	12	20	27	131	170	118	197	74	
125	125	450	415	398	408	430	12	30	86	201	241	163	398	155	400-1200*
160	160	450	415	398	408	430	12	28	108	201	241	163	398	155	
175	175	450	415	398	408	430	12	28	64	201	241	163	398	155	
200	200	450	415	398	408	430	12	22	56	201	241	163	398	155	
250	250	450	415	398	408	430	12	13	35	201	241	163	398	155	
400	400	845	800	-	808	-	20	20	111	336,5	375	-	793	240	-

WGA - Long throw nozzle grille

Properties

- Wide penetration depth with very high induction.
- Sound power level, volumetric flow and pressure loss do not depend on the direction of the nozzles.
- Very low sound power level.
- Manual, thermal or electrical adjustment possible.
- Wall/ceiling installation, with plenum box or in a duct.
- RAL colour of choice (except nozzles).

Quick selection

WGA-V

Assumptions: 35 dB(A) - installation height 3.8 m - without Coanda effect - straight flow pattern, without volume setting or box

L (mm)	H (mm)	V_{Sup} (m^3/h)	Δp_t (Pa)	x (m)	v_{mean} (m/s)	I	TV
325	125	237	134	9.07	0.28	54.3	0.03
	225	419	106	9.34	0.34	39.5	0.04
	325	594	92	9.55	0.39	33.1	0.05
425	125	299	121	9.1	0.31	47	0.04
	225	530	96	9.44	0.37	34.4	0.04
	325	751	83	9.65	0.43	28.8	0.06
525	125	359	112	9.18	0.33	42.4	0.04
	225	636	89	9.51	0.40	31.1	0.05
	325	901	77	9.73	0.46	26	0.07
625	125	417	105	9.27	0.34	39.1	0.04
	225	738	83	9.6	0.42	28.6	0.05
	325	1045	72	9.82	0.48	24	0.07
825	125	527	95	9.38	0.37	34.3	0.05
	225	934	75	9.72	0.45	25.1	0.06
	325	1323	65	9.94	0.52	21	0.08
1025	125	632	88	9.46	0.40	30.9	0.06
	225	1119	70	9.8	0.48	22.6	0.07
	325	1585	61	10.02	0.56	18.9	0.09
1225	125	711	82	9.22	0.42	27.7	0.06
	225	1253	65	9.59	0.48	20.4	0.07
	325	1902	57	10.3	0.57	17.9	0.1

WGA - Long throw nozzle grille

Dimensions

WGA-Q-F0-...

fixed nozzles

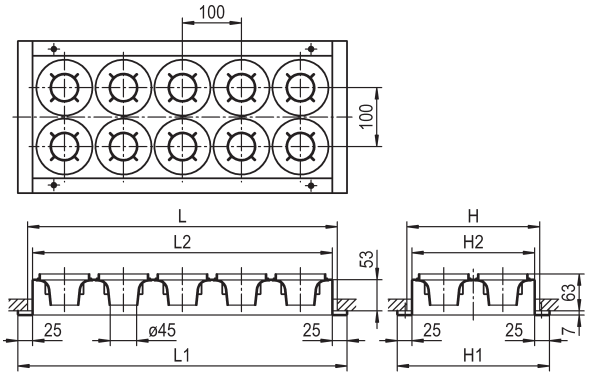

Available sizes WGA-Q-F0-... / WGA-Q-F0-...-BS-...

L	L1	L2	L3
325	358	309	310
425	458	409	410
525	558	509	510
625	658	609	610
825	858	809	810
1025	1058	1009	1010
1225	1258	1209	1210

H	H1	H2	H3
125	158	109	111
225	258	209	211
325	358	309	311

All combined lengths and heights available.
Special dimensions not available!

Dimensions

WGA-Q-V0-...

individually adjustable nozzles

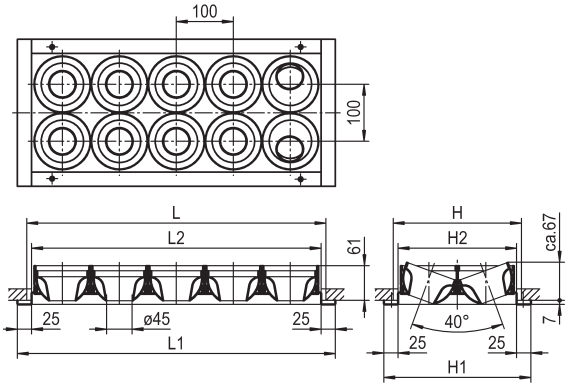

Available sizes WGA-Q-V0-... / WGA-Q-V0-...-BS-...

L	L1	L2	L3
325	358	309	310
425	458	409	410
525	558	509	510
625	658	609	610
825	858	809	810
1025	1058	1009	1010
1225	1258	1209	1210

H	H1	H2	H3
125	158	109	111
225	258	209	211
325	358	309	311

All combined lengths and heights available.
Special dimensions not available!

WGA - Long throw nozzle grille

Dimensions of accessories

With lateral spigot (-S1), only for WGA-Q-...

AK-37-...-S1: for WGA-Q-F0-... / WGA-Q-V0-...
AK-38-...-S1: for WGA-Q-VG-... / WGA-Q-VT-...
AK-39-...-S1: for WGA-Q-VE-...

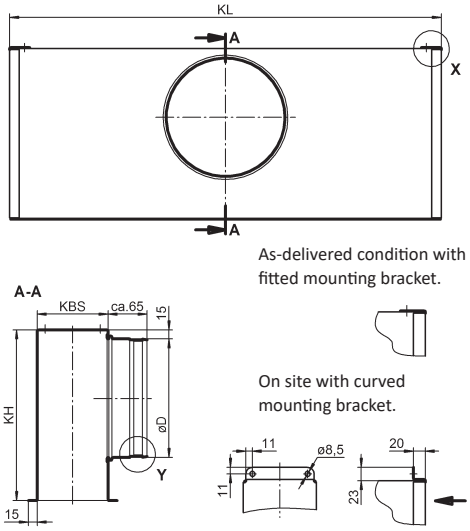

Available sizes

AK-37-...-S1 (for WGA-Q-F0-... / WGA-Q-V0-...)

NW	KBS	L	KL	KH	ØD
125	118	325	320	245	158
		425	420	245	158
		525	520	245	158
		625	620	245	158
		825	820	285	198
		1025	1020	285	198
		1225	1220	285	198
225	218	325	320	285	198
		425	420	285	198
		525	520	285	198
		625	620	335	248
		825	820	335	248
		1025	1020	335	248
		1225	1220	335	248
325	318	325	320	335	248
		425	420	335	248
		525	520	335	248
		625	620	400	313
		825	820	400	313
		1025	1020	400	313
		1225	1220	400	313

KL = length of box
KB = width of box

Spigot position

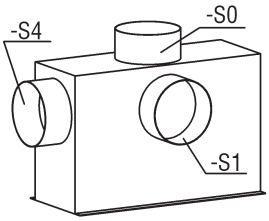

S0 = spigot from above, KL central.
S1 = lateral spigot, KL central.
S4 = spigot front side, KB central.

IDA - Ceiling diffuser

Properties

- For cooling and heating large and high halls.
- Faceplate made of painted sheet steel, colour RAL 9010 (white) or other RAL colour possible.
- The air guide funnel is made of painted sheet steel in RAL 9005 (black, for supply air model only).
- Manual, thermal or electrical adjustment possible.

Quick selection

Assumptions: installation height 5 m - ΔT cooling = 10 K - ΔT heating = 10 K

Size	V_{Sup} (m^3/h)	Cooling mode - horizontal air throw						Heating mode - vertical air throw		
		L_{WA} [dB(A)]	Δp_t (Pa)	x_{Kr} (m)	v_{mean} (m/s)	I	TV	L_{WA} [dB(A)]	Δp_t (Pa)	Y_h
400	636	45	36	3.3	0.17	16.6	0.06	43	28	6.5
	530	40	25	2.7	0.16	15.3	0.07	36	19	5.1
	441	35	10	2.3	0.14	14.4	0.07	30	13	4
500	895	45	28	2.7	0.12	14.9	0.07	41	21	5.7
	759	40	20	2.4	0.11	14.3	0.07	36	15	4.6
	643	35	14	2.2	0.10	13.9	0.07	30	10	3.8
600	1296	45	32	3	0.17	15.5	0.07	42	25	4.3
	1060	40	22	2.6	0.13	12.3	0.08	36	17	3.5
	867	35	14	2.2	0.12	11.6	0.09	30	11	2.8
800	1768	45	33	5.5	0.08	10	0.1	40	21	4.1
	1513	40	24	4.2	0.09	9	0.11	35	10	3.6
	1295	35	18	3.2	0.10	8.2	0.12	30	10	3.1

Dimensions

IDA-Q-Z-... with plenum box type SK-Q-08-Z-...-S1

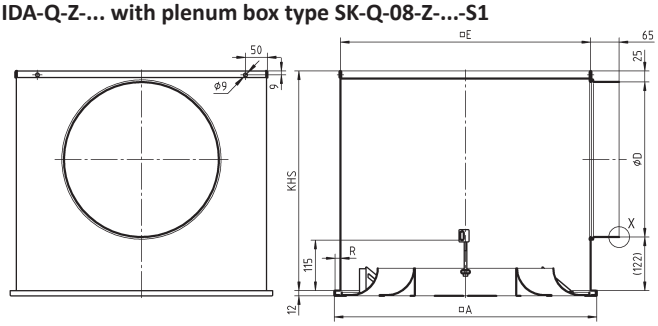

IDA-Q-AA-... with plenum box type SK-Q-08-A-...-S1

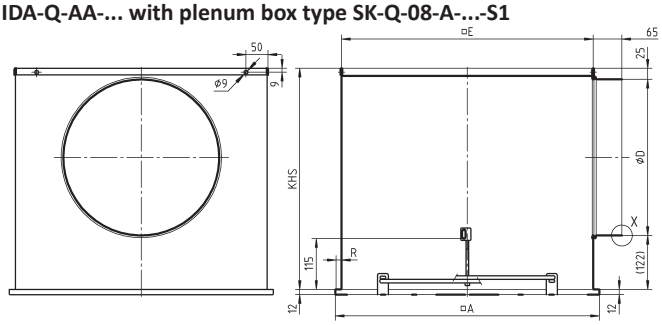

Available sizes IDA-Q

NW	□A	ØD	□E	KHS	R	$øD_{max}$ for ...-S5
400	398	248	370	395	12	138
500	498	313	470	460	12	198
600	598	353	570	500	12	248
625	623	353	570	500	24	248
800	798	448	770	595	12	353

KHS = standard height of box
Special height of box = øD + 147 mm but at least 245 mm.

IDA - Ceiling diffuser

Dimensions

IDA-R-Z-... with plenum box type SK-R-08-Z-...-S1

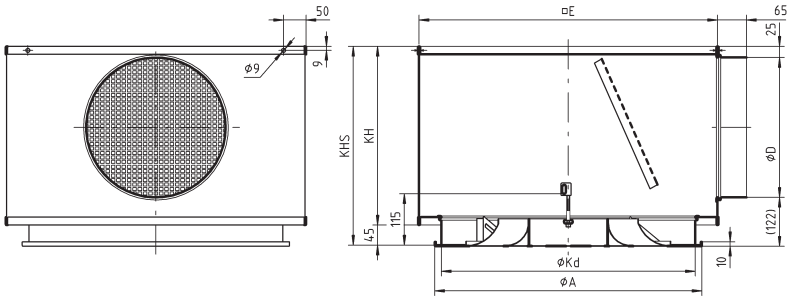

IDA-R-AA-... with plenum box type SK-R-08-A-...-S1

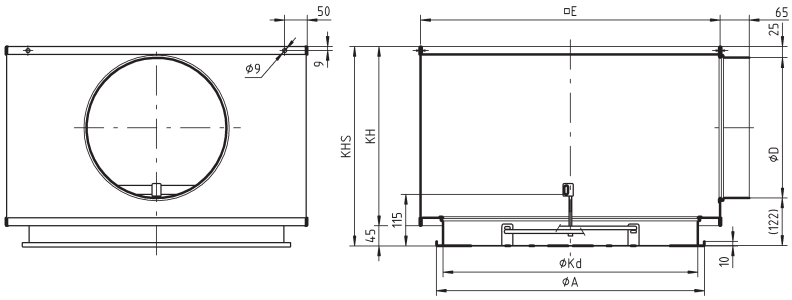

Available sizes IDA-R

NW	ØA	ØD	ØKd	□E	KH	KHS	$øD_{max}$ for ...-S5
400	500	248	470	545	350	395	198
500	600	313	570	670	400	400	298
600	700	353	670	670	455	455	353
625	725	353	670	670	455	455	353
800	900	448	870	870	550	550	398

KHS= standard height of box
Special height of box = øD + 147 mm but at least 245 mm.

Spigot position

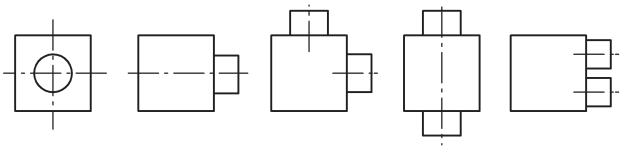

S0 S1 S2 S3 S5

IKA - Ideal comfort diffuser

Properties

- Versatile connection options, directly to pipe or elbow, with throttle element or plenum box.
- Possible to regulate from 0-100 %, horizontal or vertical air outflow direction, depending on room temperature. Intermediate position possible.
- Manual, thermal or electrical adjustment possible.
- Specially developed for heights between 4 m and 15 m.
- Ideal for large halls.
- Certified according to ATEX Directive 2014/34/EU.

Quick selection

Assumptions: 45/40 dB(A) - ΔT heating = 10 K

Size	V_{Sup} (m³/h)	L_{WA} [dB(A)]	Δp_t (Pa)	Y_h (m)
300	559 460	45 40	66 45	7.4 6.1
400	863 713	45 40	49 34	8.3 6.8
500	1319 1088	45 40	55 37	7.2 6
600	1777 1463	45 40	50 34	8.2 6.7
800	3358 2844	45 40	48 34	7.2 6.1

Dimensions

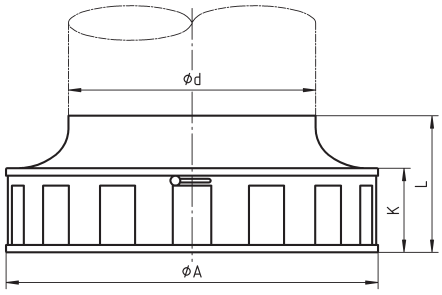

Available sizes

NW	ØA	$Ød_{inside}$	K	L
300	302	180	84	149
400	402	250	103	180
500	503	315	125	205
600	603	400	141	226
800	803	500	185	310

IGA - Air diffuser for large air volumes

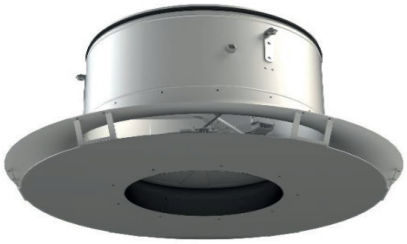

Properties

- Suitable for variable airflow.
- Air diffuser for very large volumes, up to 15 m high.
- Can be used for both cooling and heating - with electric drive as standard.
- In cooling mode: horizontal flow with very high induction.
- Motorised changeover in heating mode with a very compact, vertical air jet that ensures a large penetration depth; intermediate positions can be set.
- Optional: throttle device/rubber lip seal.

Quick selection

Cooling mode - horizontal throw						Heating mode			
Size	L_{WA} [dB(A)]	V_{Sup} (m³/h)	Δp_t (Pa)	X with ΔT = -12 K	X with ΔT = -8 K	V_{Sup} (m³/h)	Δp_t (Pa)	Y_h with ΔT = +10 K	Y_h with ΔT = +15 K
500	50 45	2450 2100	46 34	15 12	18 14	2500 2150	77 57	19 16	16 13
630	50 45	4900 4200	39 29	15 12	17 15	3500 2800	43 28	25 20	19 16
800	50 45	6300 5300	38 27	17 13	21 16	4300 3600	24 17	27 23	20 17

Dimensions

IGA-...-Z (supply air), cooling mode **IGA-Z (supply air), heating mode** **IGA-A (return air)**

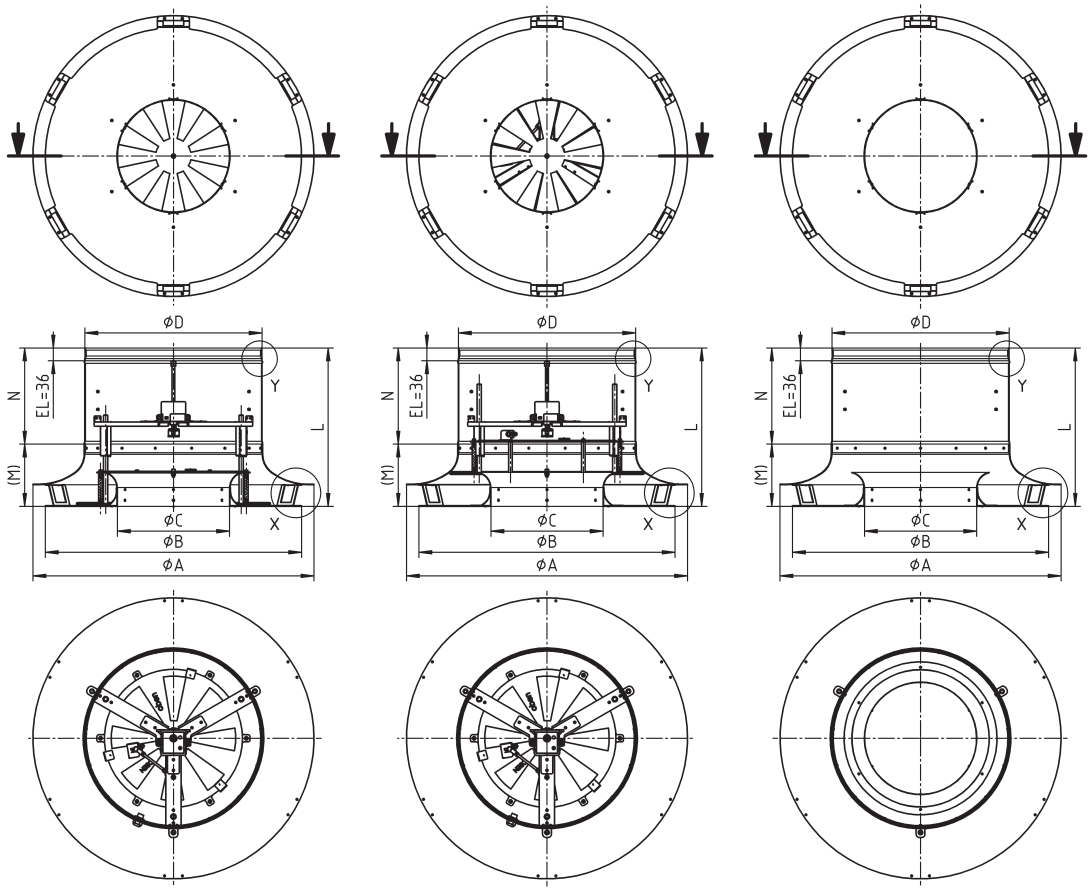

IGA - Air diffuser for large air volumes

Detail X

IGA-500/IGA-630 **IGA-800**

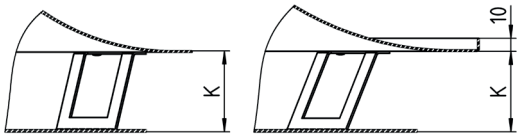

Cable bushing for electric actuator
(for supply air model only)

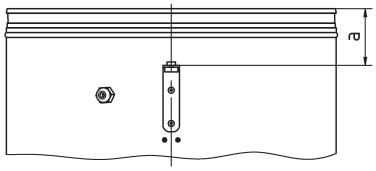

Detail of electric actuator

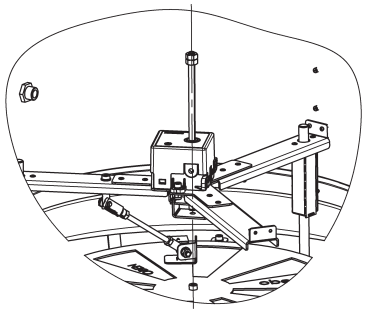

Available sizes

NW	ØD	ØA	ØB	ØC	K	M	N	a	L
500	498	790	720	315	62	175	270	85	445
630	628	998	910	396	67,5	209	280	75	489
800	798	1275	1180	496	62	270	368	168	638

Ventilation grilles and diffusers for small air volumes

KG - Compact grille

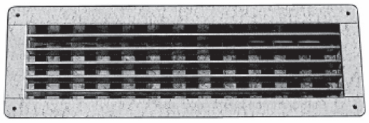

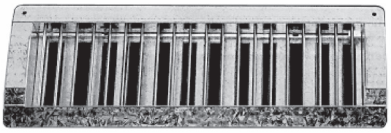

Properties

- Ceiling or wall installation, with plenum box or directly into ducts. Solid fastening with screws on a flat frame.
- The clinch joining technique without producing welding spots gives better anticorrosive protection.
- Compact unit consisting of grille and hit-and-miss damper.
- Material: galvanised sheet steel, painted sheet steel, aluminium anodised in natural colour, stainless steel 1.4301 (V2A).
- Option of a profiled cover frame that conceals the fixing screws.
- Also available as a round duct grille.

Quick selection

KG-8 - hit-and-miss damper 100 % open
Assumptions: 35 dB(A) - installation height 2.8 m - without Coanda effect - ΔT cooling = 4 K - straight flow pattern from rear

H (mm)	L (mm)	V_{Sup} (m³/h)	Δp_t (Pa)	x (m)	v_{mean} (m/s)	I	TV
65	315	127	23	4.13	0.17	12.9	0.12
	415	159	22	4.1	0.185	11.9	0.13
	515	191	21	4.1	0.195	11.2	0.13
	615	220	20	4.07	0.205	10.5	0.14
	815	275	18	4.02	0.22	9.6	0.15
	1015	330	17	4.01	0.23	9	0.17
	1215	381	17	3.98	0.245	8.5	0.17
115	315	216	20	4.28	0.23	9.1	0.16
	415	269	18	4.23	0.245	8.3	0.18
	515	320	17	4.2	0.26	7.8	0.19
	615	370	17	4.18	0.27	7.4	0.2
	815	465	16	4.15	0.29	6.8	0.22
	1015	555	15	4.12	0.305	6.3	0.24
	1215	643	15	4.11	0.32	6	0.25
165	315	285	18	4.29	0.265	7.4	0.2
	415	357	17	4.27	0.285	6.8	0.22
	515	425	16	4.24	0.3	6.3	0.24
	615	490	15	4.21	0.315	6	0.25
	815	615	15	4.18	0.34	5.5	0.27
	1015	735	14	4.15	0.36	5.1	0.29
	1215	850	13	4.13	0.375	4.9	0.31
215	315	384	17	4.39	0.315	6.1	0.25
	415	480	16	4.35	0.335	5.6	0.27
	515	571	15	4.32	0.355	5.2	0.29
	615	660	15	4.3	0.37	4.9	0.3
	815	828	14	4.26	0.4	4.5	0.33
	1015	989	13	4.23	0.42	4.2	0.35
	1215	1145	13	4.22	0.44	4	0.37
315	315	548	15	4.47	0.39	4.8	0.31
	415	685	15	4.43	0.42	4.4	0.34
	515	817	14	4.41	0.44	4.1	0.36
	615	942	14	4.38	0.465	3.9	0.38
	815	1184	13	4.35	0.495	3.6	0.42
	1015	1414	12	4.32	0.525	3.3	0.45
	1215	1635	12	4.3	0.55	3.2	0.47

KG - Compact grille

Dimensions

KG-Q-08-...

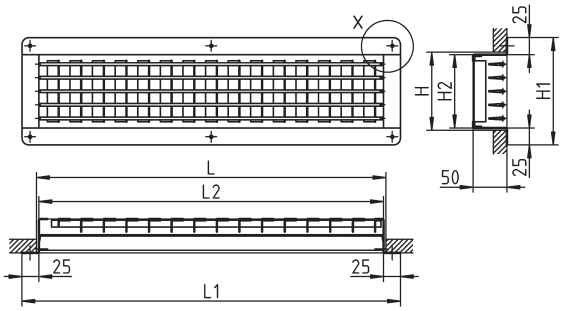

KG-Q-15-...

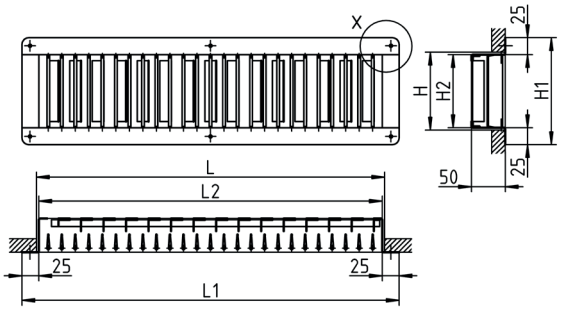

Available sizes KG-Q-08-.../KG-Q-15-...

L	L1	L2
315	358	310
415	458	410
515	558	510
615	658	610
815	858	810
1015	1058	1010
1215	1258	1210

H	H1	H2
65	108	60
115	158	110
165	208	160
215	258	210
315	358	310

All combined lengths and heights available.
Special dimensions are not possible!

Dimensions

KG-R-08-...

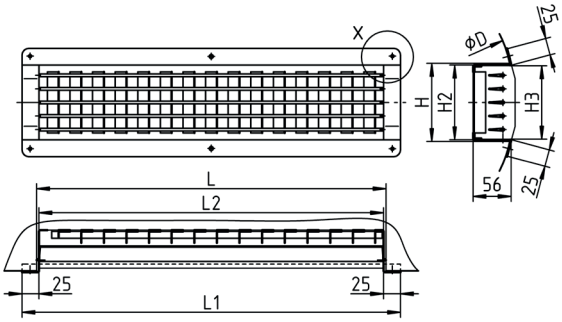

KG-R-15-...

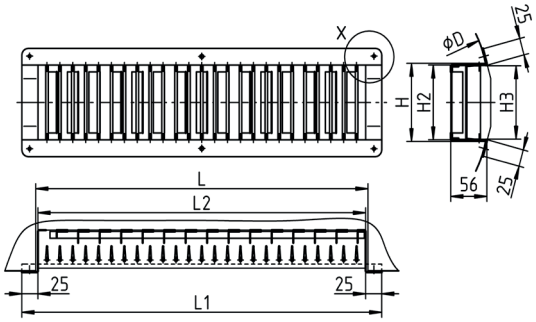

Available sizes KG-R-08-.../KG-R-15-...

L	L1	L2
315	358	310
415	458	410
515	558	510
615	658	610
815	858	810
1015	1058	1010
1215	1258	1210

H	H2	H3
65	60	58
115	110	108
165	160	158
215	210	208
315	310	308

All combined lengths and heights available.
Special dimensions are not possible!

KG - Compact grille

Installation situation KG-R-...

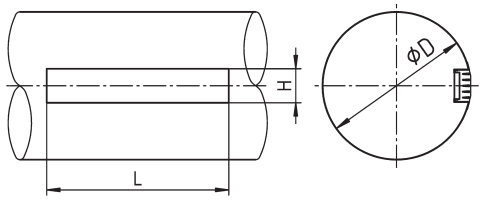

Duct diameter KG-R-...

H	ØD		
	min.	ideal	max.
65	140	250	400
115	300	500	800
165	450	625	1025
215	600	750	1250
315	900	1000	1250

Installation opening:
- made of sheet steel: L x H
- made of aluminium / stainless steel:
KG-R-08-...-AL/-V2: (L+10) x H
KG-R-15-...-AL/-V2: L x (H+10)

Dimensions of accessories

Straight plenum box
with lateral spigot on the plenum box (-S1) standard

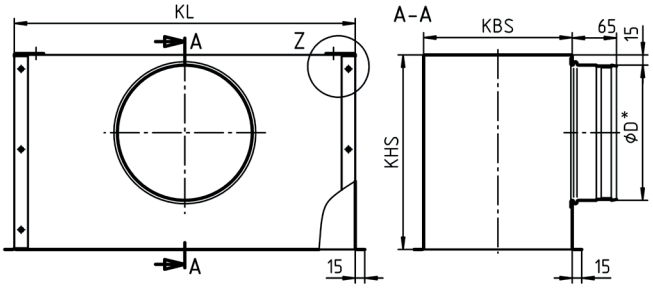

Spigot position

Straight plenum box

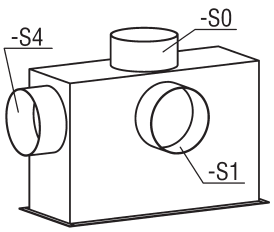

Offset plenum box

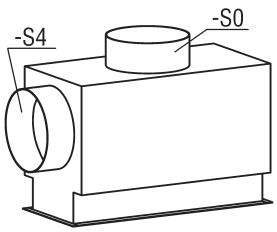

S0 = spigot from above.
S1 = lateral spigot on the box, standard.
S4 = front side spigot, not possible for band design.

KG - Compact grille

Available sizes for AK-32

H	KBS	L	KL	Spigot position -S1 (standard)				Spigot position -S0				Spigot position -S4			
				KHS	KB2	n x ØD	Plenum box shape	KHS	KB2	n x ØD	Plenum box shape	KHS	KB2	n x ØD	Plenum box shape
65	68	315	320	220	-	1 x Ø123		200*	128*	1 x ø98		220	153	1 x ø123	
		415	420												
		515	520							2 x ø98					
		615	620												
		815	820	265*	-	1 x Ø158*						265	188	1 x ø158	
		1015	1020							4 x ø98					
		1215	1220												
115	118	315	320	265	-	1 x Ø158		200*	158*	1 x ø98		265	188	1 x ø158	
		415	420												
		515	520							2 x ø98					
		615	620			1 x Ø198*									
		815	820	285*	-							285	228	1 x ø198	
		1015	1020							4 x ø98					
		1215	1220												
165	168	315	320	285*	-	1 x Ø198*		200*	228*	1 x ø198*		285	228	1 x ø198	
		415	420												
		515	520												
		615	620												
		815	820												
		1015	1020												
		1215	1220												
215	218	315	320	285	-	1 x Ø198		200*	258	1 x ø198		285	258	1 x ø198	
		415	420												
		515	520												
		615	620	335*	-	1 x Ø248			-	2 x ø178*		335	278	1 x ø248	
		815	820												
		1015	1020												
		1215	1220												
315	318	315	320	335	-	1 x Ø248		200*	-	1 x ø248		335	-	1 x ø248	
		415	420												
		515	520												
		615	620	400*	-	1 x Ø313			-	2 x ø222*		400	358	1 x ø313	
		815	820												
		1015	1020												
		1215	1220												

Plenum box shape

Even

-S0 **-S1** **-S4**

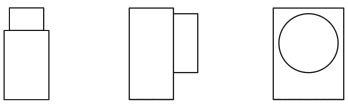

Offset

-S0 **-S4**

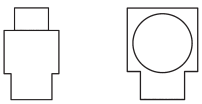

* dimensions for band design/
n = number of spigots

IB-Q - Ventilation grille

Properties

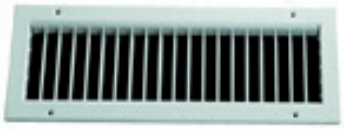

- Galvanised, painted sheet steel.
- Single or double diverting grille with optional hit-and-miss damper.
- Frame with different fastening methods.
- Ceiling or wall installation, in duct or with plenum box.
- Certified according to ATEX Directive 2014/34/EU.
- Band design also available.

Quick selection

IB-1

Assumptions: 35 dB(A) - installation height 2.8 m - without Coanda effect - ΔT cooling = 10 K - straight flow pattern from rear

L (mm)	(mm)	V_{Sup} (m^3/h)	Δp_t (Pa)	x (m)	v_{mean} (m/s)	I	TV
325	75	280	24	5.03	0.325	17.4	0.09
	125	469	20	5.11	0.425	10.6	0.14
	175	588	17	5.02	0.475	9.5	0.16
	225	846	16	4.97	0.585	6.8	0.22
	325	1236	14	5.21	0.7	5.4	0.28
425	75	352	22	5.03	0.345	16.2	0.09
	125	589	18	5.11	0.45	9.8	0.15
	175	738	16	5.01	0.505	8.7	0.18
	225	1062	14	4.97	0.62	6.2	0.24
	325	1547	12	5.22	0.735	4.8	0.31
525	75	422	21	5.03	0.36	15.4	0.1
	125	706	17	5.11	0.47	9.2	0.16
	175	883	14	5	0.53	8.1	0.19
	225	1271	13	4.96	0.65	5.7	0.26
	325	1847	11	5.24	0.765	4.5	0.33
625	75	489	20	5.03	0.375	14.7	0.1
	125	818	16	5.1	0.49	8.7	0.17
	175	1023	14	5	0.55	7.6	0.2
	225	1473	12	4.96	0.675	5.4	0.28
	325	2136	11	5.25	0.79	4.2	0.36
825	75	618	18	5.02	0.4	13.7	0.11
	125	1035	14	5.09	0.525	8	0.19
	175	1296	12	4.99	0.585	7	0.22
	225	1868	11	4.96	0.72	4.9	0.31
	325	2698	10	5.28	0.83	3.8	0.4
1025	75	745	16	5.02	0.42	13	0.11
	125	1246	13	5.09	0.55	7.5	0.2
	175	1561	11	5	0.615	6.5	0.23
	225	2249	10	4.96	0.755	4.5	0.33
	325	3237	9	5.3	0.865	3.5	0.43
1225	75	868	16	5.02	0.435	12.4	0.12
	125	1449	12	5.08	0.57	7.1	0.21
	175	1816	11	4.99	0.64	6.1	0.25
	225	2618	10	4.96	0.79	4.2	0.35
	325	3763	9	5.31	0.895	3.2	0.46

IB-Q - Ventilation grille

Dimensions

IB-Q-01-...

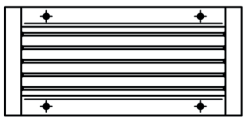

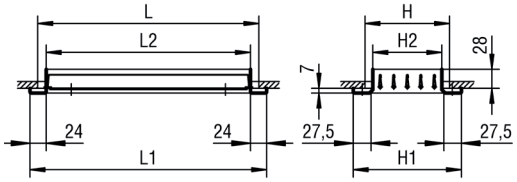

IB-Q-01 / IB-Q-02 / IB-Q-08 / IB-Q-8c
With intermediate rail from length = 825

Available sizes IB-Q-01/IB-Q-02/IB-Q-8c

L	L1	L2	L3
325	350	306	310
425	450	406	410
525	550	506	510
625	650	606	610
825	850	806	810
1025	1050	1006	1010
1225	1250	1206	1210

H	H1	H2	H3
75	110	57	60
125	160	107	110
175	210	157	160
225	260	207	210
325	360	307	310

All combined lengths and heights available.
Other sizes available on request.

Dimensions

IB-Q-10-...

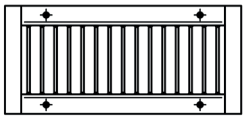

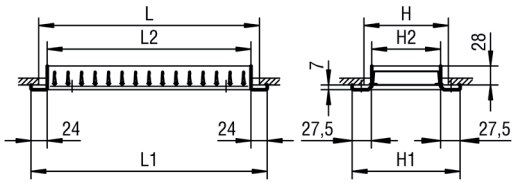

IB-Q-11 / IB-Q-16
With intermediate rail from length = 825

Available sizes IB-Q-10/IB-Q-11/IB-Q-15/IB-Q-16

L	L1	L2	L3	L4
325	350	306	309	310
425	450	406	409	410
525	550	506	509	510
625	650	606	609	610
825	850	806	809	810
1025	1050	1006	1009	1010
1225	1250	1206	1209	1210

H	H1	H2	H3
75	110	56	60
125	160	106	110
175	210	156	160
225	260	206	210
325	360	306	310

All combined lengths and heights available.
Other sizes available on request.

IB-Q - Ventilation grille

Dimensions of accessories

Straight plenum box

with lateral spigot on the plenum box (-S1)

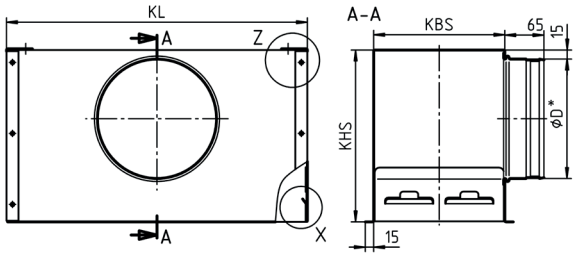

Spigot position

Straight plenum box

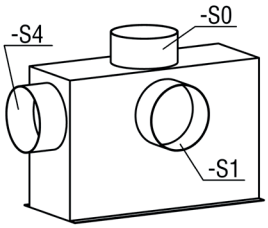

Offset plenum box

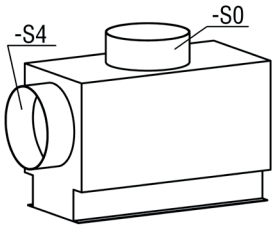

S0 = spigot from above.
S1 = lateral spigot on the box, standard.
S4 = front side spigot, not possible for band design.

IB-Q - Ventilation grille

Available sizes for AK-31

H	KBS	L	KL	Spigot position -S1 (standard)				Spigot position -S0				Spigot position -S4			
				KHS	KB2	n x ØD	Plenum box shape	KHS	KB2	n x ØD	Plenum box shape	KHS	KB2	n x ØD	Plenum box shape
75	68	325	320	220	-	1 x Ø123		200*	128*	1 x Ø98		220	153	1 x Ø123	
		425	420												
		525	520							2 x Ø98					
		625	620												
		825	820	265*	-	1 x Ø158*						265	188	1 x Ø158	
		1025	1020							4 x Ø98*					
		1225	1220												
125	118	325	320	265	-	1 x Ø158		200*	158*	1 x Ø98		265	188	1 x Ø158	
		425	420												
		525	520							2 x Ø98					
		625	620												
		825	820	285*	-	1 x Ø198*						285	228	1 x Ø198	
		1025	1020							4 x Ø98*					
		1225	1220												
175	168	325	320	285*	-	1 x Ø198*		200*	228*	1 x Ø198*		285	228	1 x Ø198	
		425	420												
		525	520												
		625	620												
		825	820												
		1025	1020												
		1225	1220												
225	218	325	320	285	-	1 x Ø198		200*	258	1 x Ø198		285	258	1 x Ø198	
		425	420												
		525	520												
		625	620	335*	-	1 x Ø248*			-	2 x Ø178*		335	278	1 x Ø248	
		825	820												
		1025	1020												
		1225	1220												
325	318	325	320	335	-	1 x Ø248		200*	-	1 x Ø248		335	--	1 x Ø248	
		425	420												
		525	520												
		625	620	400*	-	1 x Ø313*			-	2 x Ø222*		400	358	1 x Ø313	
		825	820												
		1025	1020												
		1225	1220												

Plenum box shape

Even

-S0 -S1 -S4

Offset

-S0 -S4

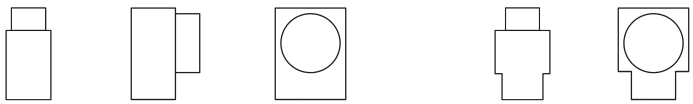

* dimensions for band design/
n = number of spigots

AL - Ventilation grille

Properties

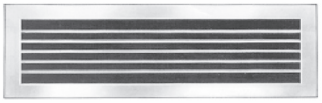

- For supply air and return air systems.
- For rectangular ducts or plenum boxes.
- With front horizontal or vertical pivoting air deflection blades.
- Natural colour anodised aluminium grille, subsequently painted in a RAL colour on request.
- Band design also available.

Dimensions

AL-01-...

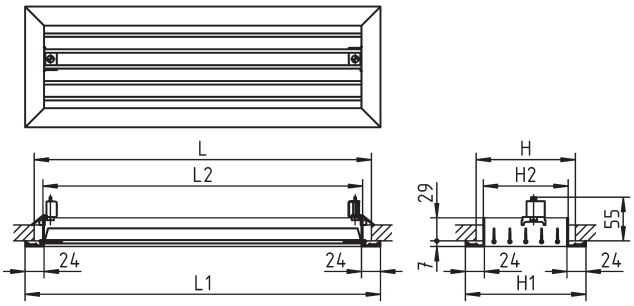

AL-11-...

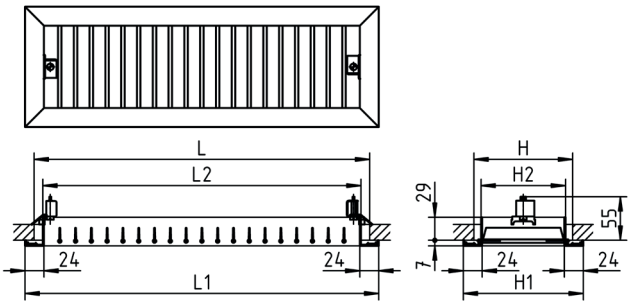

AL-01/AL-02/AL-05/AL-06 with intermediate rail for lengths from 625

Available sizes

L	L1	L2	L3
325	348	303	310
425	448	403	410
525	548	503	510
625	648	603	610
825	848	803	810
1025	1048	1003	1010
1225	1248	1203	1210

H	H1	H2	H3	H4
075	102	57	64	62
125	152	107	114	112
225	252	207	214	212
325	352	307	314	312

All combined lengths and heights available.
Other sizes available on request.

Dimensions of accessories

Straight plenum box
with lateral spigot on the plenum box (-S1)

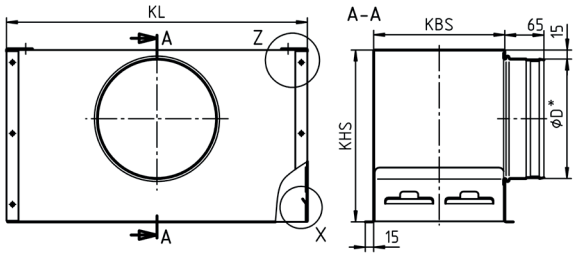

Spigot position

Straight plenum box

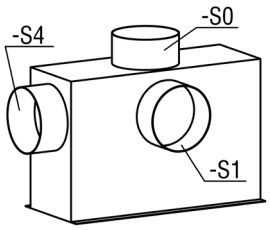

Offset plenum box

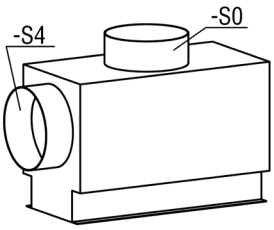

S0 = spigot from above.
S1 = lateral spigot on the box, standard.
S4 = front side spigot, not possible for band design.

AL - Ventilation grille

Available sizes for AK-33

H	KBS	L	KL	Spigot position -S1 (standard)				Spigot position -S0				Spigot position -S4			
				KHS	KB2	n x ØD	Plenum box shape	KHS	KB2	n x ØD	Plenum box shape	KHS	KB2	n x ØD	Plenum box shape
75	68	325	320	220	-	1 x Ø123		200*	128*	1 x Ø98		220	153	1 x Ø123	
		425	420												
		525	520							2 x Ø98					
		625	620												
		825	820	265*	-	1 x Ø158*						265	188	1 x Ø158	
		1025	1020							4 x Ø98*					
		1225	1220												
125	118	325	320	265	-	1 x Ø158		200*	158*	1 x Ø98		265	188	1 x Ø158	
		425	420												
		525	520							2 x Ø98					
		625	620												
		825	820	285*	-	1 x Ø198*						285	228	1 x Ø198	
		1025	1020							4 x Ø98*					
		1225	1220												
225	218	325	320	285	-	1 x Ø198		200*	258	1 x Ø198		285	258	1 x Ø198	
		425	420												
		525	520												
		625	620	335*	-	1 x Ø248*			-	2 x Ø178*		335	278	1 x Ø248	
		825	820												
		1025	1020												
		1225	1220												
325	318	325	320	335	-	1 x Ø248		200*	-	1 x Ø248		335	-	1 x Ø248	
		425	420												
		525	520												
		625	620	400*	-	1 x Ø313*			-	2 x Ø222*		400	358	1 x Ø313	
		825	820												
		1025	1020												
		1225	1220												

* dimensions for band design/n = number of spigots

Plenum box shape

Even

-S0 **-S1** **-S4**

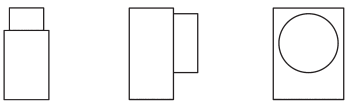

Offset

-S0 **-S4**

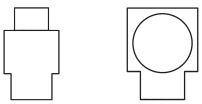

PA-...-01 to 2c and PA-...-10 - Ventilation grille with fixed blades

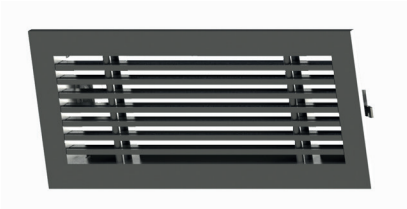

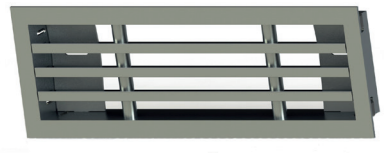

Properties

- Grille with vertical fixed profiled blades with different frame profiles.
- Fastening with screw mounting, concealed screw mounting, clamp mounting, concealed mounting.
- Wall or ceiling installation, in a duct or with plenum box.
- Aluminium, natural colour anodised, painted in a RAL colour on request.
- In ball-impact resistant design if needed.
- Band design also available.

Quick selection

PA-...-01

Assumptions: 35 dB(A) - installation height 2.8 m - without Coanda effect - ΔT cooling = 10 K - straight flow pattern from rear

L (mm)	H (mm)	V_{Sup} (m^3/h)	Δp_t (Pa)	x (m)	v_{mean} (m/s)	I	TV
325	75	237	25	5.23	0.30	23.6	0.1
	125	397	20	5.55	0.38	16.1	0.1
	225	667	16	5.97	0.42	11.8	0.1
	325	866	14	5.38	0.49	8.6	0.2
425	75	301	22	5.39	0.32	22.6	0.1
	125	505	18	5.79	0.40	15.4	0.1
	225	846	14	6.24	0.44	11.1	0.1
	325	1099	13	5.52	0.53	7.9	0.2
525	75	364	21	5.53	0.33	21.9	0.1
	125	609	17	5.97	0.41	14.8	0.1
	225	1021	13	6.47	0.46	10.6	0.1
	325	1327	12	5.64	0.55	7.4	0.2
625	75	426	20	5.64	0.34	21.4	0.1
	125	712	16	6.14	0.43	14.3	0.1
	225	1190	12	6.66	0.47	10.1	0.1
	325	1549	11	5.74	0.58	7	0.2
825	75	544	18	5.81	0.36	20.5	0.1
	125	911	14	6.4	0.45	13.6	0.1
	225	1525	11	6.98	0.50	9.5	0.2
	325	1986	10	5.91	0.62	6.4	0.2
1025	75	661	17	5.96	0.38	19.8	0.1
	125	1106	13	6.61	0.47	13.1	0.1
	225	1852	11	7.25	0.52	9	0.2
	325	2411	9	6.04	0.65	6	0.2
1225	75	776	16	6.09	0.39	19.3	0.1
	125	1296	12	6.79	0.49	12.7	0.1
	225	2170	10	7.47	0.53	8.7	0.2
	325	2829	9	6.15	0.68	5.7	0.3

PA-...-01 to 2c and PA-...-10 - Ventilation grille with fixed blades

Dimensions

PA-...-01-...-VM

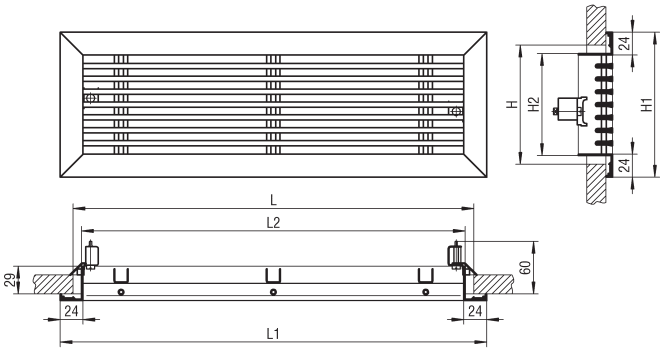

All models consist of basic type PA-...-01

PA-...-2a-...

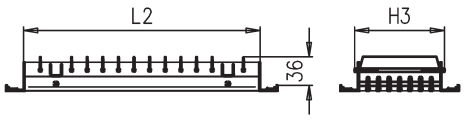

PA-...-2b-...

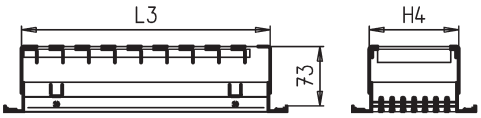

PA-...-2c-...

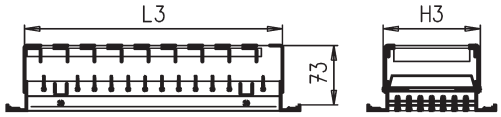

Frame profile PA-...-01 / PA-...-2a / PA-...-2b / PA-...-2c

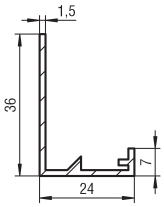

Available sizes

L	L1	L2	L3
325	348	304	310
425	448	404	410
525	548	504	510
625	648	604	610
825	848	804	810
1025	1048	1004	1010
1225	1248	1204	1210

H	H1	H2	H3	H4	PLA	
					8 mm	13 mm
75	102	58	65	60	3	2
125	152	108	115	110	7	5
225	252	208	215	210	14	10
325	352	308	315	310	21	16

All combined lengths and heights available.
Other sizes available on request.
PLA = number of profiled blades.

PA-...-01 to 2c and PA-...-10 - Ventilation grille with fixed blades

Dimensions

PA-...-10-...-VS-...

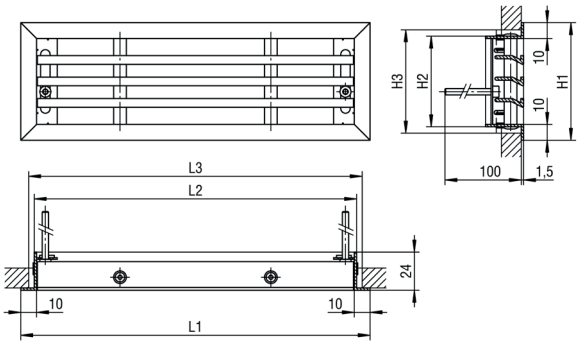

Frame profile PA-...-10

M4x80 for model with counter pole brace
M4x20 for model with plenum box

Available sizes

L	L1	L2	L3
00225	220	205	210
00325	320	305	310
00425	420	405	410
00525	520	505	510
00625	620	605	610
00825	820	805	810
01025	1020	1005	1010
01225	1220	1205	1210

H	H1	H2	H3	PLA	
				8 mm	13 mm
075	74	57	65	3	2
125	124	107	115	7	5
225	224	207	215	14	10
325	324	307	315	21	16

All combined lengths and heights available.
Other sizes available on request.
Hit-and-miss damper not possible.
PLA = number of profiled blades.

Dimensions of accessories

Plenum box (-AK-34-...) with lateral spigot (-S1)
only for PA-...-01 / PA-...-2a

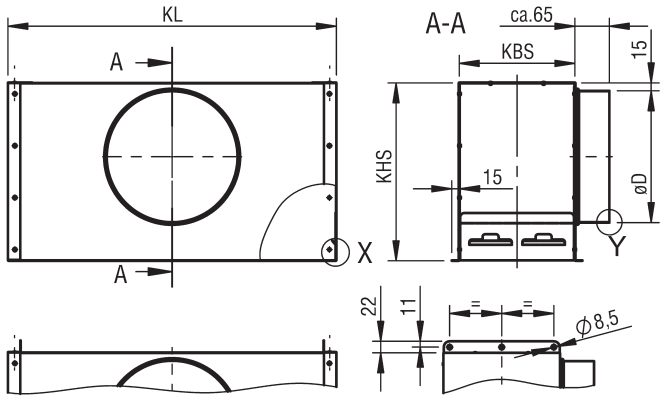

PA-...-01 to 2c and PA-...-10 - Ventilation grille with fixed blades

Available sizes AK-34-...-S1

L	H	KL	KBS	KHS	ØD
00325	075	320	68	210	123
00425	075	420	68	210	123
00525	075	520	68	210	123
00625	075	620	68	210	123
00825	075	820	68	245	158
01025	075	1020	68	245	158
01225	075	1220	68	245	158

L	H	KL	KBS	KHS	ØD
00325	225	320	218	285	198
00425	225	420	218	285	198
00525	225	520	218	285	198
00625	225	620	218	335	248
00825	225	820	218	335	248
01025	225	1020	218	335	248
01225	225	1220	218	335	248

L	H	KL	KBS	KHS	ØD
00325	125	320	118	245	158
00425	125	420	118	245	158
00525	125	520	118	245	158
00625	125	620	118	245	158
00825	125	820	118	285	198
01025	125	1020	118	285	198
01225	125	1220	118	285	198

L	H	KL	KBS	KHS	ØD
00325	325	320	318	335	248
00425	325	420	318	335	248
00525	325	520	318	335	248
00625	325	620	318	400	313
00825	325	820	318	400	313
01025	325	1020	318	400	313
01225	325	1220	318	400	313

Spigot position

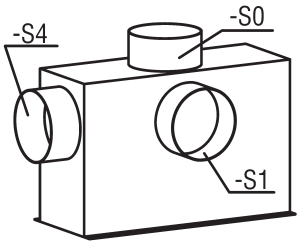

S0 = spigot from above.
S1 = lateral spigot, standard.
S4 = spigot, front side.

PA-...-01 to 2c and PA-...-10 - Ventilation grille with fixed blades

Plenum box (-AK-35-...) with lateral spigot (-S1)
Only for PA-...-10

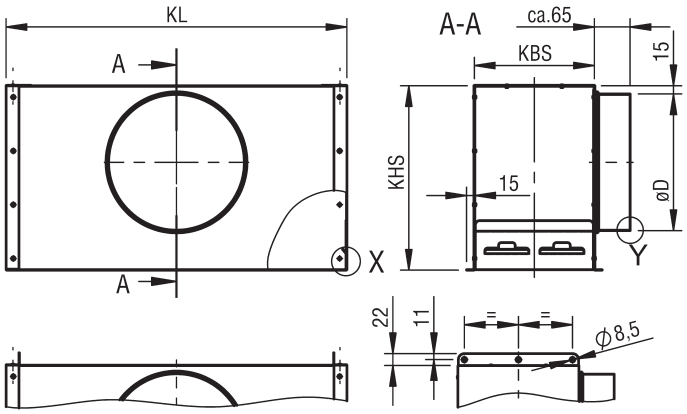

Available sizes AK-35-...-S1

L	H	KL	KBS	KHS	ØD	a
00225	075	208	63	210	123	106
00325	075	308	63	210	123	106
00425	075	408	63	210	123	106
00525	075	508	63	210	123	106
00625	075	608	63	245	158	106
00825	075	808	63	245	158	106
01025	075	1008	63	245	158	106
01225	075	1208	63	245	158	106

L	H	KL	KBS	KHS	ØD	a
00225	125	208	113	245	158	138
00325	125	308	113	245	158	138
00425	125	408	113	245	158	138
00525	125	508	113	245	158	138
00625	125	608	113	245	158	138
00825	125	808	113	285	198	138
01025	125	1008	113	285	198	138
01225	125	1208	113	285	198	138

PA-...-01 to 2c and PA-...-10 - Ventilation grille with fixed blades

Available sizes AK-35-...-S1

L	H	KL	KBS	KHS	ØD	a
00225	225	208	213	285	198	180
00325	225	308	213	285	198	180
00425	225	408	213	285	198	180
00525	225	508	213	285	198	180
00625	225	608	213	335	248	180
00825	225	808	213	335	248	180
01025	225	1008	213	335	248	180
01225	225	1208	213	335	248	180

L	H	KL	KBS	KHS	ØD	a
00225	325	208	313	334	248	230
00325	325	308	313	335	248	230
00425	325	408	313	335	248	230
00525	325	508	313	335	248	230
00625	325	608	313	400	313	230
00825	325	808	313	400	313	230
01025	325	1008	313	400	313	230
01225	325	1208	313	400	313	230

Spigot position

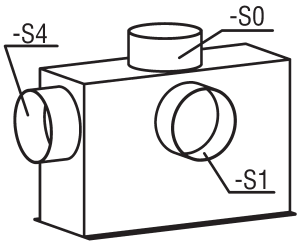

S0 = spigot from above.
S1 = lateral spigot, standard.
S4 = spigot, front side.

PA-...-03 to PA-...-07 - Ventilation grille with fixed blades, wall or floor installation

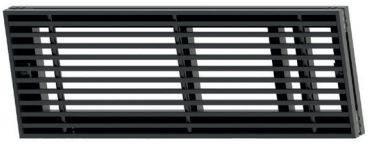

Properties

- Supply or return air grille with fixed horizontal profiled blades on the front.
- Designed for installation on a wall, on the ceiling or in the floor.
- Aluminium, natural colour anodised, painted in a RAL colour on request.
- Fastened with concealed screw mounting.
- Walk-on with blade spacing 8 mm.
- Band design also available.

Quick selection

PA-...-03

Assumptions: 35 dB(A) - installation height 2.8 m - without Coanda effect - ΔT cooling = 10 K

L (mm)	H (mm)	V_{Sup} (m³/h)	Δp_t (Pa)	x (m)	v_{mean} (m/s)	I	TV
325	75	237	25	5.23	0.30	23.6	0.1
	125	397	20	5.55	0.38	16.1	0.1
	225	667	16	5.97	0.42	11.8	0.1
	325	866	14	5.38	0.49	8.6	0.2
425	75	301	22	5.39	0.32	22.6	0.1
	125	505	18	5.79	0.40	15.4	0.1
	225	846	14	6.24	0.44	11.1	0.1
	325	1099	13	5.52	0.53	7.9	0.2
525	75	364	21	5.53	0.33	21.9	0.1
	125	609	17	5.97	0.41	14.8	0.1
	225	1021	13	6.47	0.46	10.6	0.1
	325	1327	12	5.64	0.55	7.4	0.2
625	75	426	20	5.64	0.34	21.4	0.1
	125	712	16	6.14	0.43	14.3	0.1
	225	1190	12	6.66	0.47	10.1	0.1
	325	1549	11	5.74	0.58	7	0.2
825	75	544	18	5.81	0.36	20.5	0.1
	125	911	14	6.4	0.45	13.6	0.1
	225	1525	11	6.98	0.50	9.5	0.2
	325	1986	10	5.91	0.62	6.4	0.2
1025	75	661	17	5.96	0.38	19.8	0.1
	125	1106	13	6.61	0.47	13.1	0.1
	225	1852	11	7.25	0.52	9	0.2
	325	2411	9	6.04	0.65	6	0.2
1225	75	776	16	6.09	0.39	19.3	0.1
	125	1296	12	6.79	0.49	12.7	0.1
	225	2170	10	7.47	0.53	8.7	0.2
	325	2829	9	6.15	0.68	5.7	0.3

PA-...-03 to PA-...-07 - Ventilation grille with fixed blades, wall or floor installation

Dimensions

PA-...-03-...-VM-...

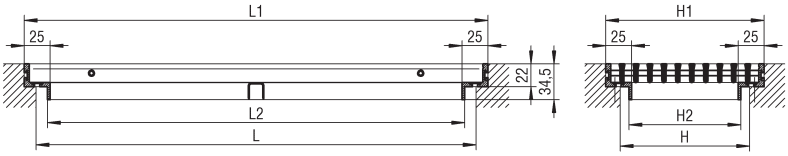

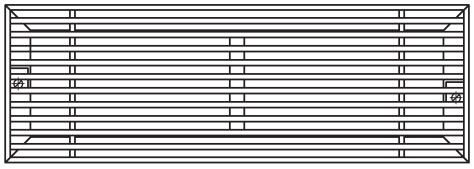

All models consist of basic type PA-...-03

PA-...-05-...

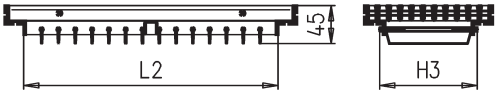

PA-...-06-...

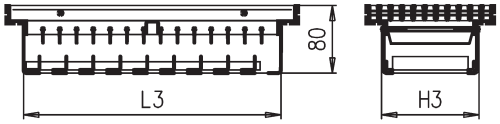

PA-...-07-...

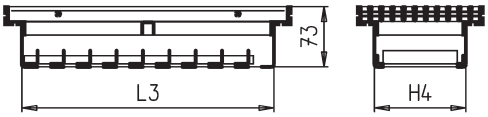

Available sizes

L	L1	L2	L3
325	348	304	310
425	448	404	410
525	548	504	510
625	648	604	610
825	848	804	810
1025	1048	1004	1010
1225	1248	1204	1210

H	H1	H2	H3	H4	PLA	
					8 mm	13 mm
75	102	58	65	60	6	4
125	152	108	115	110	10	7
225	252	208	215	210	17	12
325	352	308	315	310	25	18

All combined lengths and heights available.
Other sizes available on request.
PLA = number of profiled blades.

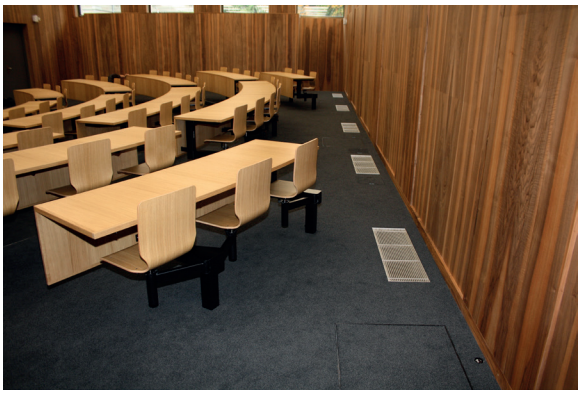

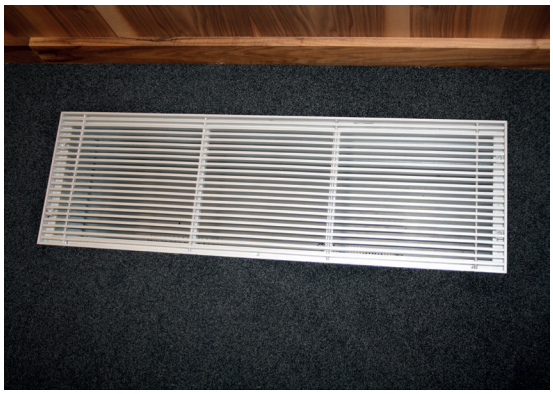

LK - Ventilation grille

Properties

- Single or double diverting grille. Profiled frame with screw mounting.
- Horizontal blades, additionally with vertical blades or draw blades.
- Grille with horizontal front louvres, frames and louvres made of plastic material (Hostalit Z, grey).
- Wall or ceiling installation in a duct.

Dimensions

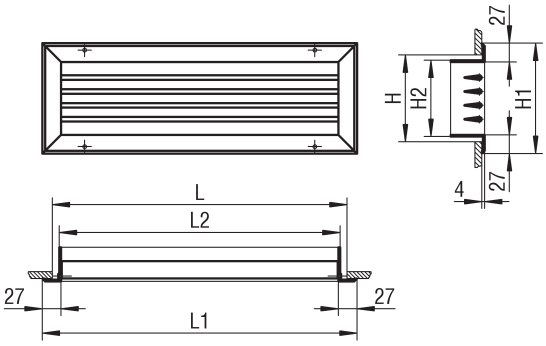

Available sizes

L	L1	L2
325	354	309
425	454	409
525	554	509
625	654	609
825	854	809
1025	1054	1009
1225	1254	1209

H	H1	H2	H3
75	109	60	64
125	159	110	114
225	259	210	214
325	359	310	314

All combined lengths and heights available.

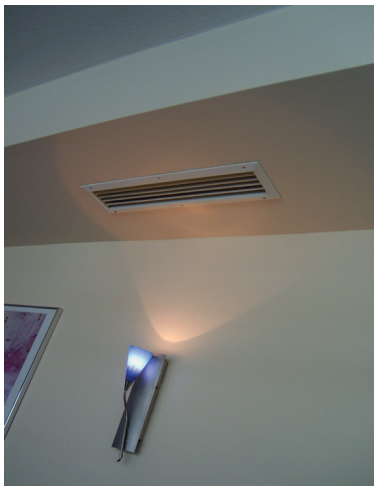

SGA - Sight-proof transfer grille

Properties

- V-shaped blades and overlapping frame made of natural colour anodised aluminium guarantee a perfect screen.
- Aluminium, natural colour anodised, painted in a RAL colour on request.
- Matching frame made of anodised aluminium makes sandwich installation possible on doors up to a maximum of 56 mm thick.
- Installation frame made of galvanised sheet steel.

Dimensions

SGA-GR0-...

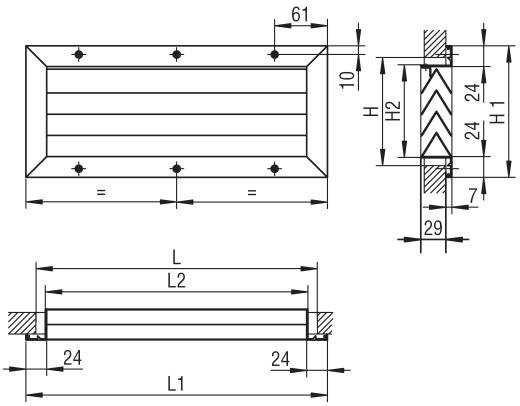

SGA-GR1-...

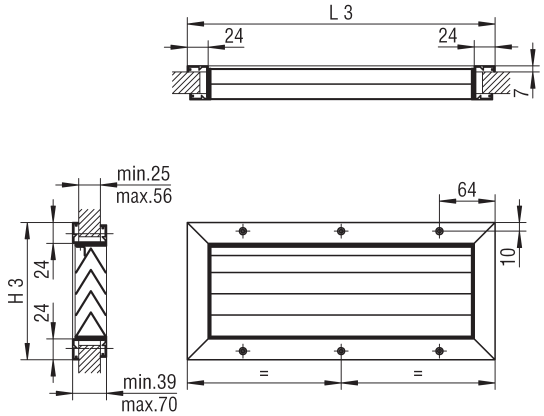

Available sizes

L	L1	L2	L3
325	348	304	354
425	448	404	454
525	548	504	554
625	648	604	654
825	848	804	854
1025	1048	1004	1054
1225	12048	1204	1254

H	H1	H2	H3
75	102	58	108
125	152	108	158
225	252	208	258
325	352	308	358
425	452	408	458

SGA - Sight-proof transfer grille

Pressure loss and noise level

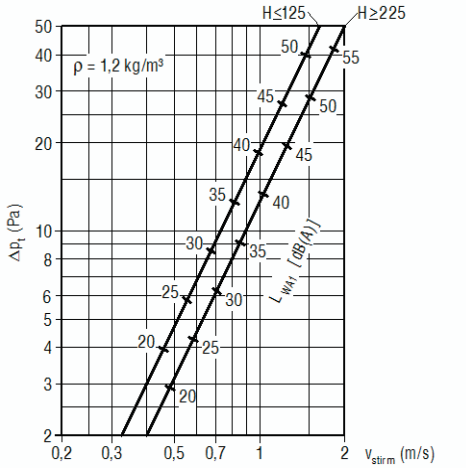

Face area (A_{face})

H (mm)	L (mm)						
	325	425	525	625	825	1025	1225
75	0.0156	0.0208	0.0260	0.0312	0.0416	0.0520	0.0624
125	0.0312	0.0416	0.0520	0.0624	0.0832	0.1040	0.1248
225	0.0612	0.0816	0.1020	0.1224	0.1632	0.2040	0.2448
325	0.0912	0.01216	0.1520	0.1824	0.2432	0.3040	0.3648
425	0.1212	0.1616	0.2020	0.2424	0.3232	0.4040	0.4848
	A_{face} (m^2)						

Free cross-section (FQ)

H (mm)	L (mm)						
	325	425	525	625	825	1025	1225
75	0.0038	0.0052	0.0065	0.0078	0.0103	0.0129	0.0155
125	0.0116	0.0155	0.0193	0.0232	0.0309	0.03886	0.0463
225	0.0270	0.0361	0.0451	0.0541	0.0721	0.0902	0.1082
325	0.0425	0.0567	0.0708	0.0850	0.1133	0.1417	0.1700
425	0.0580	0.0773	0.0966	0.1159	0.1546	0.1932	0.2319
	FQ (m^2)						

Correction factor (KF)

A_{face} (m^2)	0.021	0.026	0.033	0.042	0.053	0.066	0.080
KF (-)	-9	-8	-7	-6	-5	-4	-3

A_{face} (m^2)	0.100	0.130	0.160	0.210	0.260	0.333	0.404
KF (-)	-2	-1	0	+1	+2	+3	+4

$L_{WA} = L_{WA1} + KF$

The pressure loss and the sound power level at the overflow grille are determined based on the air volume and the face area.
V_{face}(m/s) = air volume (m^3/h) / (A_{face}(m^2) * 3600 s/h)
When determining the grille size, it is recommended not to exceed a face speed of 1 m/s or a pressure loss of 15 Pa.

IB-R - Ventilation grille

Properties

- Supply air and return air grilles especially suitable for pipe mounting.
- With front side horizontal or vertical, pivoting, individually adjustable air deflection blades.
- Galvanised, painted sheet steel.
- Certified according to ATEX Directive 2014/34/EU.

Quick selection

Assumptions: sound power level 35 dB(A) - vk = 3 m/s - SS-K 100% open

L (mm)	H (mm)	IB-R-01/10 Supply air			IB-R-01/10 Return air			IB-R-08/8c/15/16 Supply air			IB-R-08/8c/15/16 Return air		
		Air volume (m^3/h)	Sound power level dB(A)	Pres-sure loss (Pa)	Air volume (m^3/h)	Sound power level dB(A)	Pres-sure loss (Pa)	Air volume (m^3/h)	Sound power level dB(A)	Pres-sure loss (Pa)	Air volume (m^3/h)	Sound power level dB(A)	Pres-sure loss (Pa)
315	65	271	35	24	223	35	16	123	35	26	135	35	18
	115	455	35	20	404	35	13	155	35	24	242	35	15
	215	819	35	16	725	35	11	186	35	22	431	35	12
415	65	343	35	22	286	35	15	217	35	21	172	35	17
	115	575	35	18	518	35	12	274	35	20	310	35	14
	215	1036	35	14	929	35	10	330	35	19	551	35	11
515	65	413	35	21	348	35	14	383	35	18	209	35	16
	115	692	35	17	630	35	11	205	35	21	375	35	13
	215	1246	35	13	1128	35	9	258	35	20	667	35	10
615	65	481	35	20	409	35	13	310	35	19	245	35	15
	115	805	35	16	739	35	11	360	35	18	440	35	12
	215	1449	35	12	1322	35	9	455	35	17	780	35	10
815	65	610	35	18	525	35	12	548	35	16	314	35	13
	115	1022	35	14	952	35	10	637	35	15	564	35	11
	215	1845	35	11	1704	35	8	366	35	18	1002	35	9
1015	65	737	35	16	641	35	11	462	35	17	382	35	13
	115	1233	35	13	1161	35	9	554	35	16	686	35	10
	215	2225	35	10	2076	35	7	643	35	15	1217	35	8
1215	65	858	35	15	753	35	11	816	35	15	448	35	12
	115	1437	35	12	1364	35	9	981	35	14	805	35	9
	215	2596	35	10	2442	35	7	1143	35	13	1428	35	8

IB-R - Ventilation grille

IB-R-01

Assumptions: sound power level 35 dB(A) - installation height 2.8 m - without Coanda effect - cooling = -10 K

L (mm)	H (mm)	Air volume (m³/h)	Sound power level dB(A)	Pressure loss (Pa)	x (m)	v_{mean} (m/s)	Cooling (K)	Induction	TV
315	**65**	271	35	24	5.32	0.30	10	18.5	0.08
	115	455	35	20	5.42	0.40	10	11.4	0.13
	215	819	35	16	5.26	0.55	10	7.3	0.20
415	**65**	343	35	22	5.32	0.32	10	17.3	0.09
	115	575	35	18	5.41	0.42	10	10.5	0.14
	215	1036	35	14	5.26	0.58	10	6.6	0.22
515	**65**	413	35	21	5.33	0.34	10	16.4	0.09
	115	692	35	17	5.41	0.44	10	9.8	0.15
	215	1246	35	13	5.26	0.61	10	6.1	0.24
615	**65**	481	35	20	5.33	0.35	10	15.7	0.09
	115	805	35	16	5.41	0.46	10	9.3	0.16
	215	1449	35	12	5.26	0.64	10	5.7	0.26
815	**65**	610	35	18	5.32	0.38	10	14.6	0.10
	115	1022	35	14	5.4	0.49	10	8.5	0.17
	215	1845	35	11	5.26	0.68	10	5.2	0.29
1015	**65**	737	35	16	5.32	0.40	10	13.8	0.11
	115	1233	35	13	5.4	0.52	10	8	0.19
	215	2225	35	10	5.25	0.71	10	4.8	0.31
1215	**65**	858	35	15	5.31	0.41	10	13.2	0.11
	115	1437	35	12	5.39	0.54	10	7.6	0.20
	215	2596	35	10	5.27	0.74	10	4.5	0.33

Installation situation

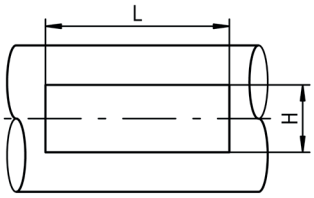

The curved flange and the three height dimensions, apart from providing high stability and torsional rigidity, allow optimum adaptation of the ventilation grille type Ib-R to sheet metal and spiral ducts. The selection of the grille height depends on the duct measures shown in the table. The grille frames only make optimum contact when the ideal duct diameter is used.

IB-R-01 / 10-...

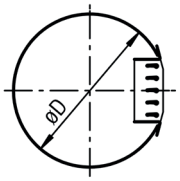

IB-R-08 / 8c / 15 / 16-...

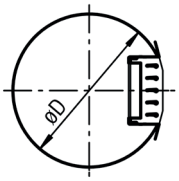

Duct diameter

IB-R	ØD		
H	**Min.**	**Ideal**	**Max.**
65	140	250	400
115	300	500	800
215	600	750	1250

IB-R - Ventilation grille

Dimensions

Without hit-and-miss damper

IB-R-01-...

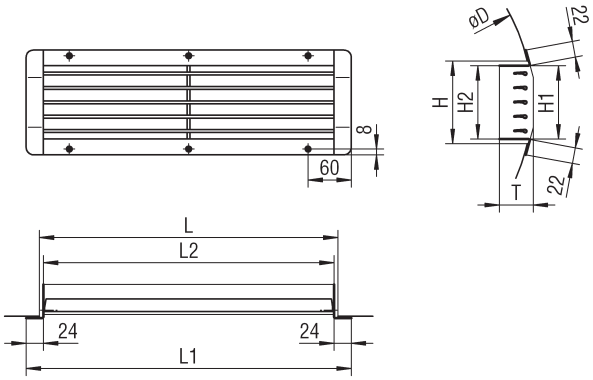

IB-R-10-...

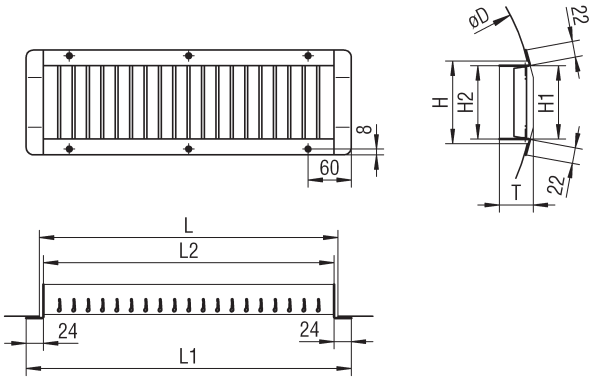

Available sizes IB-R-01 / IB-R-10

L	L1	L2
315	352	306
415	452	406
515	552	506
615	652	606
815	852	806
1015	1052	1006
1215	1252	1206

H	H1	H2	T
65	52	54	42
115	102	104	47
215	202	204	56

All combined lengths and heights available.
Other sizes available on request.

Dimensions

With hit-and-miss damper

IB-R-08-...

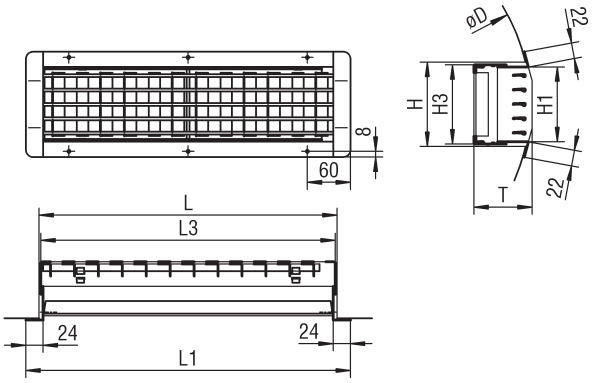

IB-R-8c-...

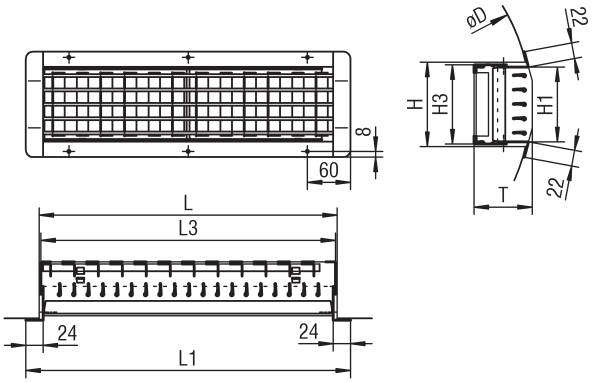

Available sizes IB-R-08 / IB-R-8c / IB-R-15 / IB-R-16

L	L1	L3
315	352	310
415	452	410
515	552	510
615	652	610
815	852	810
1015	1052	1010
1215	1252	1210

H	H1	H3	T
65	58	60	85
115	108	110	91
215	208	210	95

All combined lengths and heights available.
Other sizes available on request.

LL - Louvre air grille

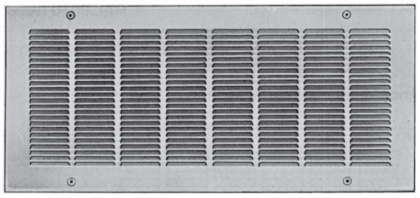

Properties

- For installation on a wall and on doors as a transfer grille.
- Deep-drawn transfer grille made of painted steel, RAL 9010. Other RAL colours optional.
- Installation frame made of galvanised sheet steel.
- Fastened with screw mounting.

Dimensions

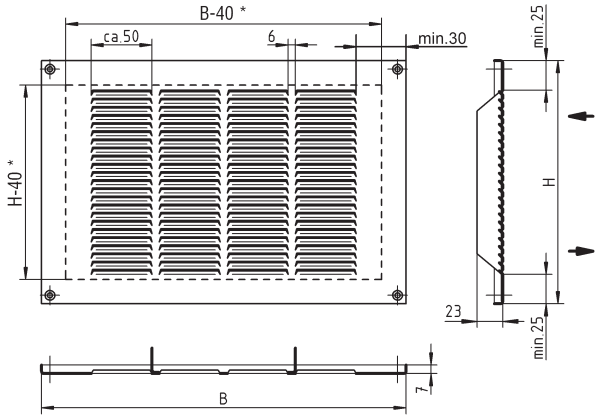

*On-site cut-out dimension

Number of reinforcing angles from height 550 onwards:
B < 500 - none
B > 500-799 - 2 reinforcing angles
B > 800 - 3 reinforcing angles

Available sizes

B	H
200	200
250	250
300	300
350	350
400	400
450	450
500	500
550	550
600	600
650	700
700	800
750	900
800	1000
900	
1000	

All combined heights and widths available.

DBBR - Round duct grille

Properties

- Supply and return air grille with horizontal, pivoted air deflector louvres on the front and optionally with a hit-and-miss damper for duct installation.
- Frame made of powder-coated sheet steel, RAL 9010 (white) or made of galvanised sheet steel.
- Blades made of plastic material, similar to RAL colour 9005 (black), RAL 9010 (white) or RAL 9006 (grey).
- Further RAL colours available.

Dimensions

DBBR-1-Z-...

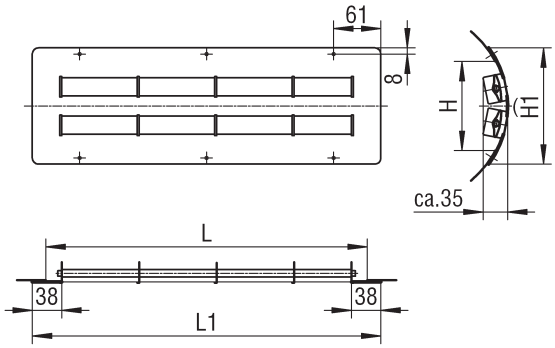

DBBR-8-Z-...

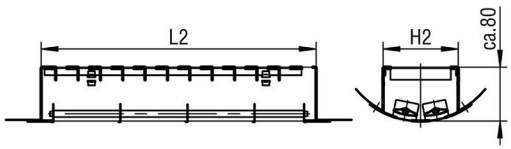

Available sizes

L	L1	L2	
		supply air	return air
315	350	310	276
415	450	410	376
515	550	510	476
615	650	610	576
815	850	810	776
1015	1050	1010	976
1225	1250	1210	1176

H	H1	H2	Number of slots
65	100	60	1
115	150	110	2
215	250	210	4

All combined lengths and heights available.
For lengths L ≥ 515 mm, an intermediate rail is punched in.

DBBRR - Round duct blade diffuser

Properties

- For visible installation in supply and return air systems.
- Round duct with integrated blades arranged in a line, which can also be adjusted by hand on-site, with hit-and-miss damper.
- The uniform admission allows the DBBRR to be installed at any point along the duct system.
- Suitable for connection to DIN ducts.

Quick selection

Assumption: Vk = 3 m/s - length 1000 mm - 32 dB(A) - two-way throw

L	S	Δk	LM	Vk (m/s)	V_{Sup} (m^3/h)	L_{WA} [dB(A)]	$Δp_t$ (Pa)	x+y (m)	V_{max} (m/s)	I	TV
1000	2	100	B	3	89	32	13	1.63	0.11	8.2	0.11
1000	4	100	B	3	179	32	13	2.1	0.11	6.5	0.14
1000	6	100	B	3	268	32	13	2.36	0.11	5.4	0.17
1000	8	100	B	3	357	32	13	2.9	0.11	5.9	0.16
1000	10	100	B	3	446	32	13	3.62	0.11	7	0.14
1000	12	100	B	3	536	32	13	4.41	0.11	8.4	0.12
1000	14	100	B	3	625	32	13	5.43	0.11	10.5	0.1

Correction factor pressure loss and noise level

V_{Front} = V_{Sup} (m^3/h) : (FQ x 3600 x KF)

NW	V_{sup} (for V_K = 1 m/s)		FQ (m^2)						
	(m^3/h)	[l/s]	2	4	6	8	10	12	14
200	108	30	0.01	0.02	-	-	-	-	-
224	139	39	0.01	0.02	-	-	-	-	-
250	174	48	0.01	0.02	-	-	-	-	-
280	219	61	0.01	0.02	0.03	-	-	-	-
315	277	77	0.01	0.02	0.03	-	-	-	-
355	356	99	0.01	0.02	0.03	0.04	-	-	-
400	448	124	0.01	0.02	0.03	0.04	-	-	-
450	567	158	0.01	0.02	0.03	0.04	-	-	-
500	701	195	0.01	0.02	0.03	0.04	0.05	0.06	0.07
560	978	272	0.01	0.02	0.03	0.04	0.05	0.06	0.07
630	1115	310	0.01	0.02	0.03	0.04	0.05	0.06	0.07

	L	KF
1-part	500	x 0.5
	750	x 0.75
	1000	x 1.00
2-part	1500	x 1.5
	1750	x 1.75
	2000	x 2.0

DBBRR - Round duct blade diffuser

Dimensions

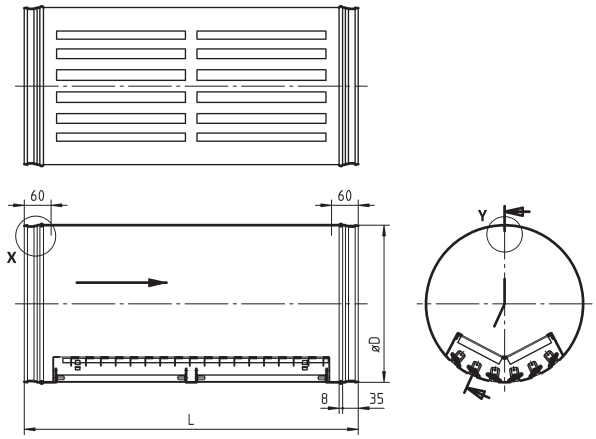

Available sizes

NW	ØD	Number of slots along circumference						
		2	4	6	8	10	12	14
200	198	x	x	-	-	-	-	-
224	222	x	x	-	-	-	-	-
250	248	x	x	-	-	-	-	-
280	278	x	x	x	-	-	-	-
315	313	x	x	x	-	-	-	-
355	353	x	x	x	x	-	-	-
400	398	x	x	x	x	-	-	-
450	448	x	x	x	x	-	-	-
500	498	x	x	x	x	x	x	x
560	558	x	x	x	x	x	x	x
630	628	x	x	x	x	x	x	x

x = available
- = not available
Accessory parts only available up to NW 500.

L		Number of slots around length
1-part	500	1
	750	2
	1000	3
2-part	1500	4
	1750	5
	2000	6

DBBRR - Round duct blade diffuser

Division of length

1-part:

Length 500

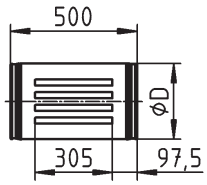

2-part:

Length 1500

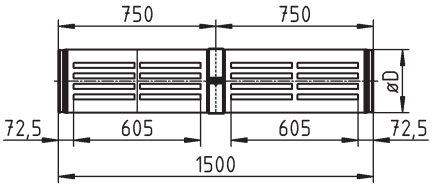

Length 750

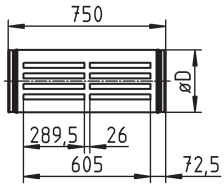

Length 1750

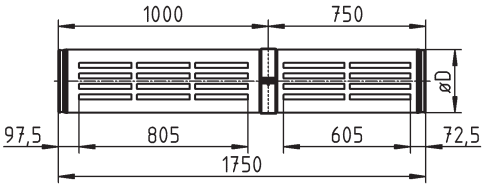

Length 750

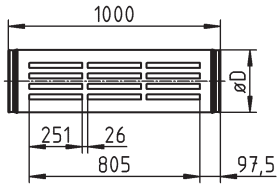

Length 2000

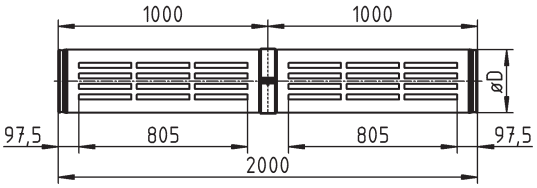

KGRR - Round duct compact grille

Properties

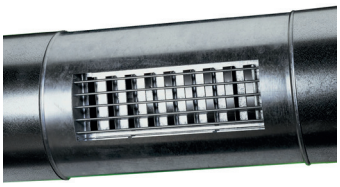

- Smooth duct with integrated ventilation grille.
- For visible installation in supply and return air systems.
- The air volume can be adjusted using a hit-and-miss damper.
- The round duct grille KGRR can be installed at any point in the duct system.
- Suitable for connection to DIN ducts.

Dimensions

KGRR-08-...-6U-...

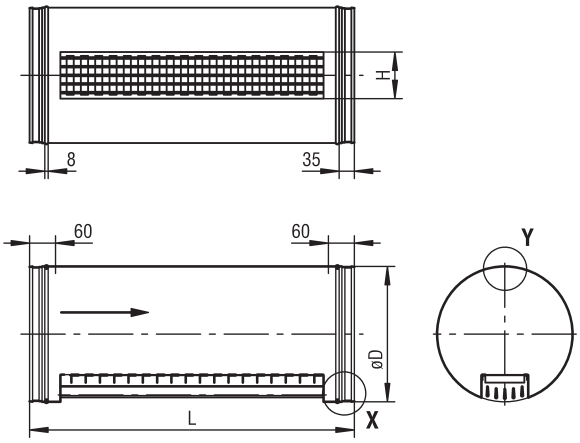

KGRR-15-...-6U-...

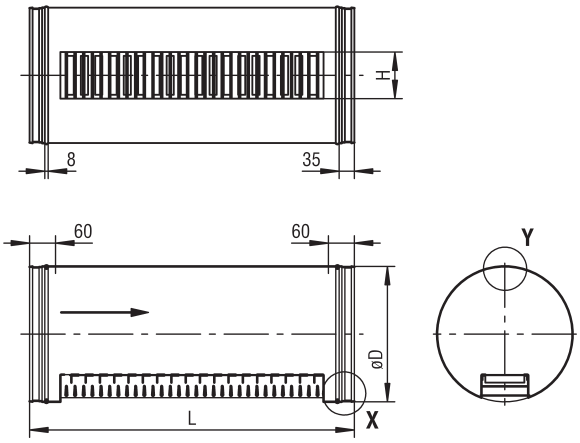

Available sizes

NW	ØD	H			
		65	115	215	315
200	198	x	x	-	-
224	222	x	x	-	-
250	248	x	x	x	-
280	278	x	x	x	-
315	313	x	x	x	-
355	353	x	x	x	x
400	398	x	x	x	x
450	448	x	x	x	x
500	498	x	x	x	x
560	558	x	x	x	x
630	628	x	x	x	x

All lengths and nominal widths can be combined.
x = available
- = not available
Accessory parts only available up to NW 500.

KGRR - Round duct compact grille

Supply air face velocity

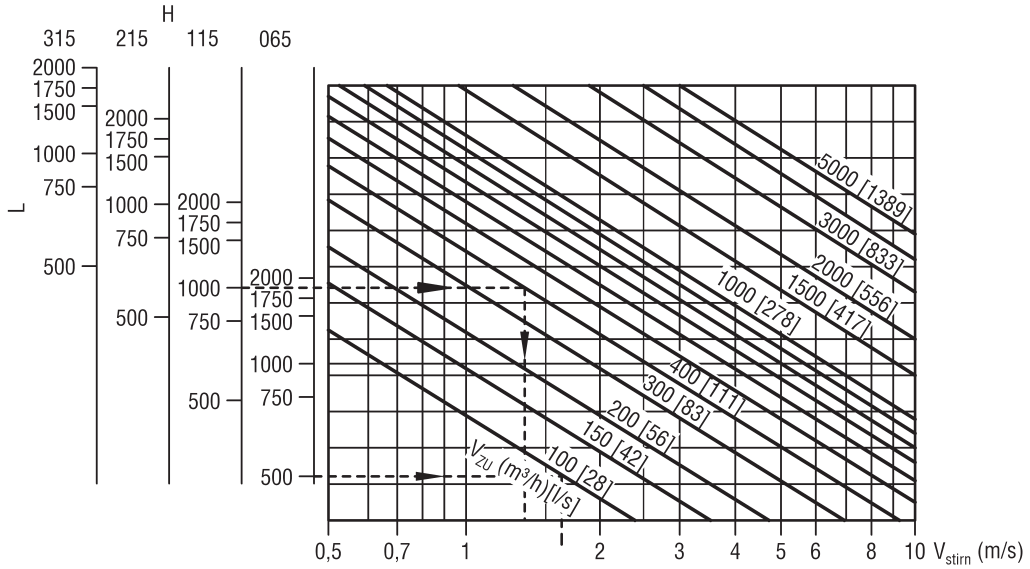

supply air

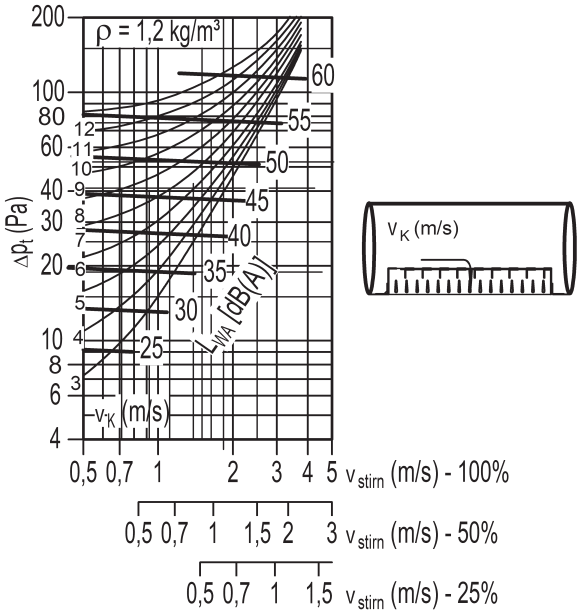

Hit-and-miss damper open in %.

return air

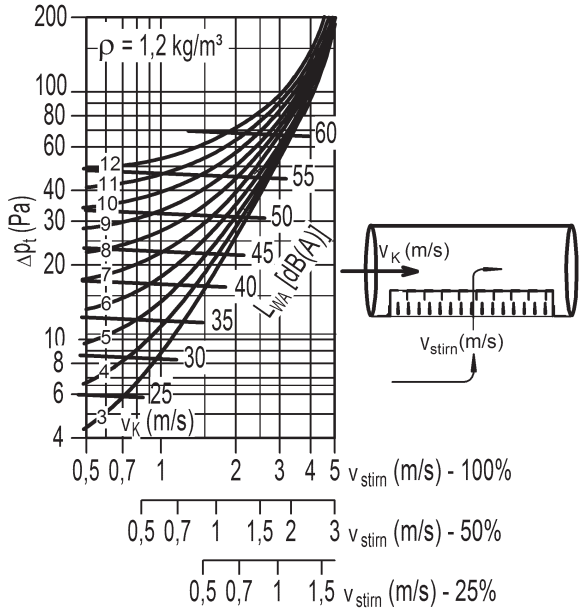

Hit-and-miss damper open in %.

DSARR - Round duct nozzle jet diffuser

Properties

- For visible installation in supply air systems.
- **DSARR-F:** integrated, non-adjustable nozzles.
- **DSARR-V:** integrated nozzles individually adjustable by hand.
- The DSARR can be installed at any point in the duct system.
- Suitable for connection to DIN ducts.

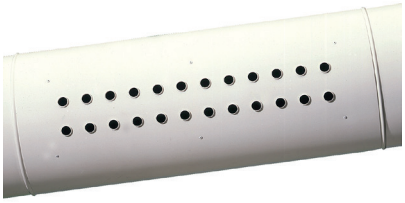

Dimensions

DSA-RR-F-6U-...

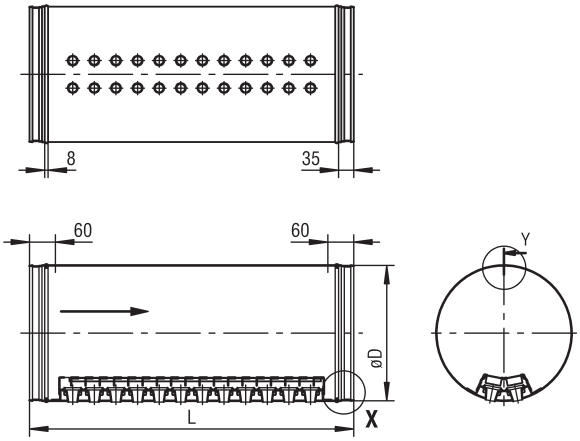

DSA-RR-V-6U-...

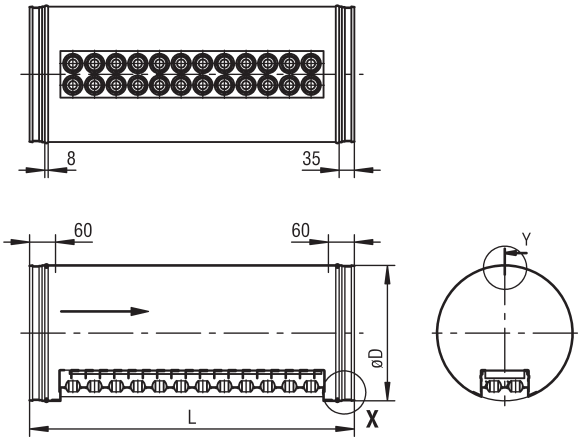

Available sizes

NW	ØD	Nozzle rows		
		1	2	4
200	198	x	x	-
224	222	x	x	-
250	248	x	x	-
280	278	x	x	-
315	313	x	x	-
355	353	x	x	-
400	398	x	x	x
450	448	x	x	x
500	498	x	x	x
560	558	x	x	x
630	628	x	x	x

L		Number of nozzles/row
1-part	500	6
	750	12
	1000	16
2-part	1500	2 x 12
	1750	1 x 12 + 1 x 16
	2000	2 x 16

All lengths and nominal widths can be combined.
x = available
- = not available
Accessory parts only available up to NW 500.

WGARR - Round duct long throw grille

Properties

- For visible installation in supply air systems.
- The diffuser type WGARR consists of a round duct with integrated, linear long range nozzles which can also be adjusted subsequently by hand.
- A hit-and-miss damper can be installed in the diffuser.
- The WGARR can be installed at any point in the duct system.
- Suitable for connection to DIN ducts.

Dimensions

WGARR-6U

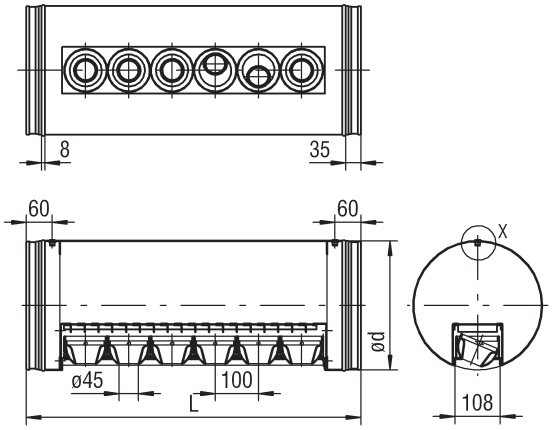

Available sizes

NW	ØD	Nozzle rows	
		1	2
200	198	x	-
224	222	x	-
250	248	x	-
280	278	x	-
315	313	x	-
355	353	x	-
400	398	x	x
450	448	x	x
500	498	x	x
560	558	x	x
630	628	x	x

All lengths and nominal widths can be combined.
x = available
- = not available
Accessory parts only available up to NW 500.

	L	Number of nozzles/row
1-part	500	3
	750	6
	1000	8
2-part	1500	2 x 6
	1750	1 x 6 + 1 x 8
	2000	2 x 8

Layout

The long throw nozzle with integrated round duct type WGARR is configured as shown in the diagrams for the long throw grille type WGA.

MINOPAB - Floor displacement diffuser for small air volumes

Properties

- For small air volumes.
- Developed for installation in raised floors.
- The air flows out of the displacement ventilation system horizontally.
- This airflow allows a very rapid decrease in ΔT and speed near the diffuser.

Quick selection

Size 1

V_{Sup} (m^3/h)	L_{WA} [dB(A)]	Δp_t (Pa)	V_{stirn} (m/s)	x (m) with v_{mean} 0.15 m/s
25	< 25	1	0.19	0.8
79	25	7	0.60	1.1
96	30	10	0.73	1.2

Size 2

V_{Sup} (m^3/h)	L_{WA} [dB(A)]	Δp_t (Pa)	V_{stirn} (m/s)	x (m) with v_{mean} 0.15 m/s
50	< 25	1	0.24	1.0
131	25	9	0.63	2.0
152	30	12	0.74	2.3

Dimensions

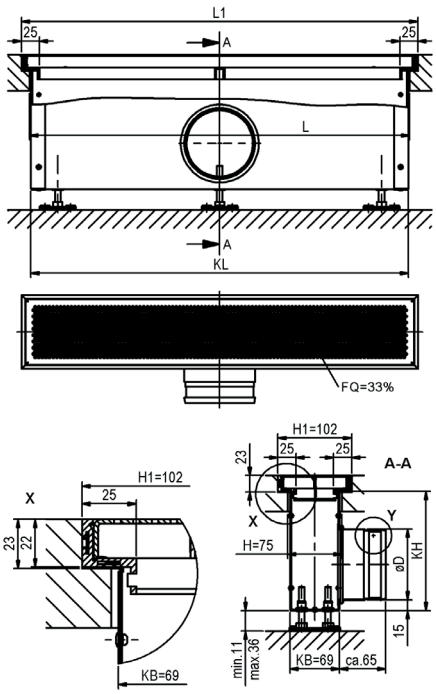

Available sizes

	MINOPAB-1	MINOPAB-2
L	525	825
L1	548	848
KL	522	822
KH	165	190
ØD	Ø98	Ø123

MINODSX - Slot diffuser for small air volumes

Properties

- For small air volumes.
- Developed for installation in closed ceiling systems.
- Used in cooling or heating mode.
- Fast decrease in speed and temperature difference.

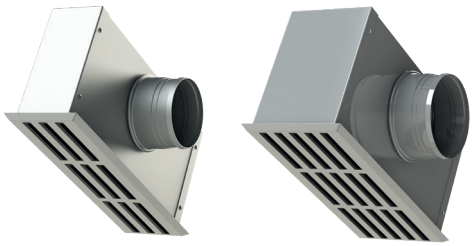

Quick selection

MINODSX-1

V_{Sup}		L_{WA} [dB(A)]	Δp_t (Pa)	x+y (m) with v_{mean} 0.15 m/s
(m³/h)	[l/s]			
52	14.4	25	14	2.9
60	16.7	30	19	3.9
69	19.2	35	25	5.2
80	22.2	40	33	7.1

MINODSX-2

V_{Sup}		L_{WA} [dB(A)]	Δp_t (Pa)	x+y (m) with v_{mean} 0.15 m/s
(m³/h)	[l/s]			
77	21.4	25	11	2.3
90	25.0	30	15	2.7
105	29.2	35	20	3.3
123	34.2	40	27	4.0

Available sizes

	H	H1	KB	KH	ØD	n
MINODSX-1	85	110	80	165	Ø98	3
MINODSX-2	140	160	135	190	Ø123	5

n = number of slots in the height

Dimensions

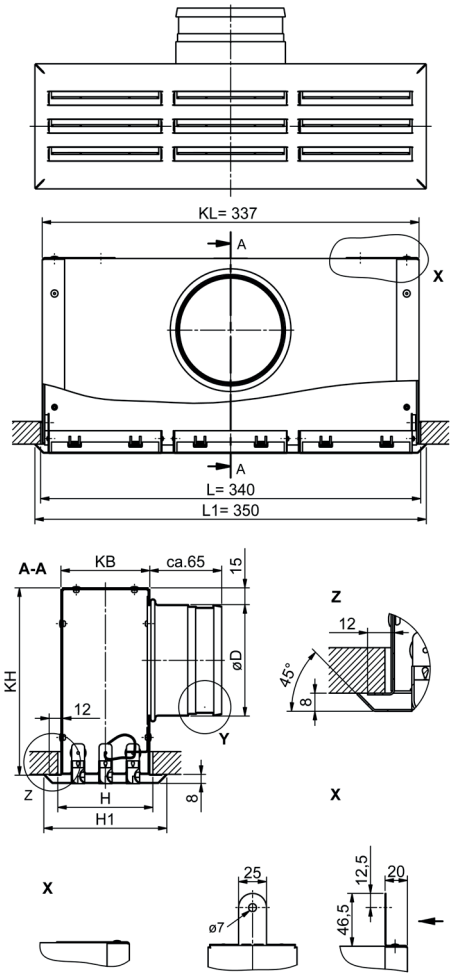

MINODSA - Nozzle jet diffuser for small air volumes

Properties

- For small air volumes.
- For installation in walls and ceilings.
- 7 or 14 nozzles.
- High penetration depth.

Quick selection

Size 1

V_{Sup} (m^3/h)	L_{WA} [dB(A)]	Δp_t (Pa)	x+y (m) with v_{mean} 0.15 m/s
37	25	17	2.4
46	30	27	3.2
57	35	41	4.2
70	40	62	5.5

Size 2

V_{Sup} (m^3/h)	L_{WA} [dB(A)]	Δp_t (Pa)	x+y (m) with v_{mean} 0.15 m/s
56	25	10	3.2
70	30	16	4.2
88	35	25	5.4
111	40	40	7.1

Dimensions

MINODSA-A0 (spigot from behind, standard)

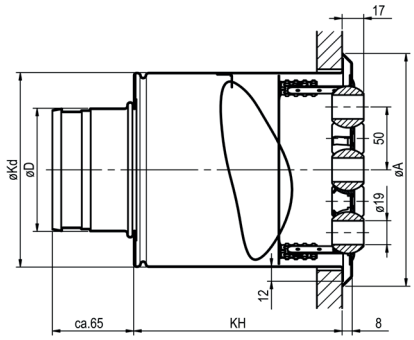

MINODSA-A1 (lateral spigot)

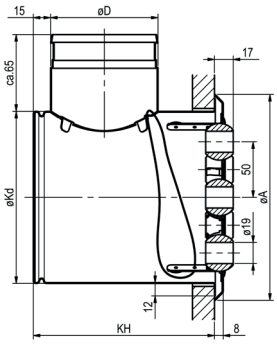

Available sizes

	MINODSA-1	MINODSA-2
ØA	Ø185	Ø240
ØKd	Ø155	Ø210
KH	165	190
ØD	Ø98	Ø123

Displacement, floor and step diffusers

QA - Displacement air diffuser

Properties

- 90°, 180°, 360° throw area.
- Displacement air diffuser with low speed, low induction, with a ΔT between 0 and -4 K.
- Galvanised sheet steel displacement air diffuser, in RAL colours on request, round connection spigot.

Quick selection

MOD	NW	L	V_{Sup}	L_{WA}	Δp_t	x	Δt_k	TV
QA-R	250	1000	294	30	16	0.5	3	0.27
QA-R	1000	1000	4920	30	22	1	3	0.33
QA-R	300	1000	498	30	22	0.5	3	0.36
QA-R	400	1000	794	30	17	0.5	3	0.37
QA-R	450	1000	1046	30	19	0.5	3	0.42
QA-R	500	1000	1180	30	21	0.5	3	0.4
QA-R	600	1000	1966	30	19	0.5	3	0.52
QA-R	650	1000	2493	30	21	0.5	3	0.63
QA-R	700	1000	3069	30	21	0.5	3	0.72
QA-R	830	1000	4920	30	24	1	3	0.61

Correction factor for pressure loss

QA-R	L (mm)	500	750	1000	1250	1500	2000
	KF (-)	x 1.9	x 1.45	x 1	x 0.87	x 0.74	x 0.64
QA-H	L (mm)	500	750	1000	1250	1500	2000
	KF (-)	x 2.08	x 1.6	x 1.1	x 0.95	x 0.81	x 0.7
QA-V	L (mm)	500	750	1000	1250	1500	2000
	KF (-)	x 2.26	x 1.73	x 1.19	x 1.03	x 0.88	x 0.76

Correction factor for volumetric flow

QA-R	L (mm)	500	750	1000	1250	1500	2000
	KF (-)	x 1.35	x 1.15	x 1	x 0.98	x 0.96	x 0.98
QA-H	L (mm)	500	750	1000	1250	1500	2000
	KF (-)	x 1.54	x 1.28	x 1.11	x 1.09	x 1.06	x 1.01
QA-V	L (mm)	500	750	1000	1250	1500	2000
	KF (-)	x 1.64	x 1.37	x 1.19	x 1.16	x 1.14	x 1.03

QA - Displacement air diffuser

Dimensions

QA-V
Quarter cylinder, 90° throw,
for corner installation

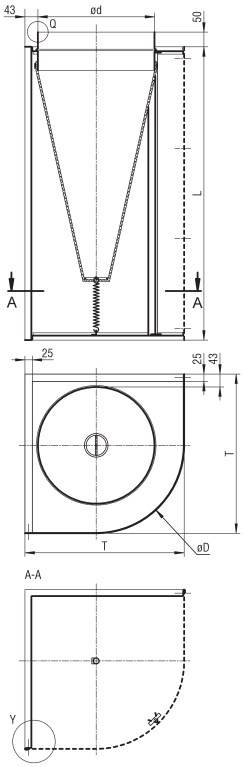

QA-H
Half cylinder, 180° throw,
for installation on walls or columns

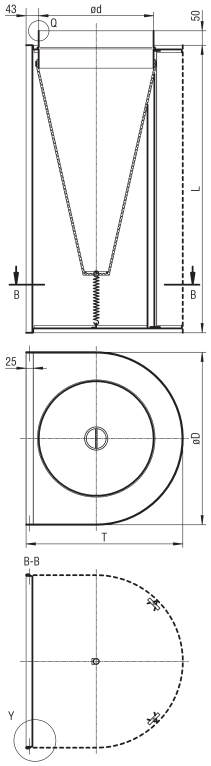

QA-R
Cylinder, 360° throw,
for mid-room installation

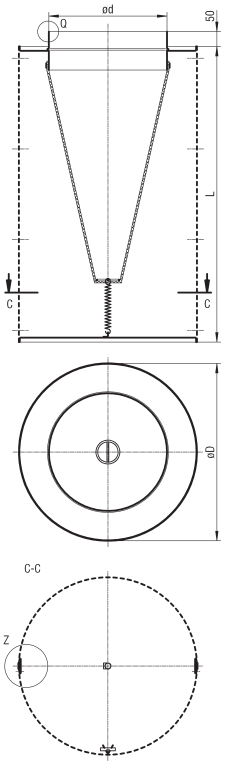

Available sizes

NW	Ød	ØD	T
0250	158	250	248
0300	198	300	293
0400	248	400	368
0450	298	450	418
0500	313	500	450
0600	398	600	543
0650	448	650	593
0700	498	700	643
0830	628	830	773
1000	628	1000	858

L
0500
0750
1000
1250
1500
2000

Detail Y

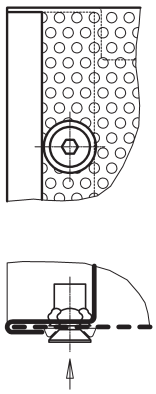

Detail Z

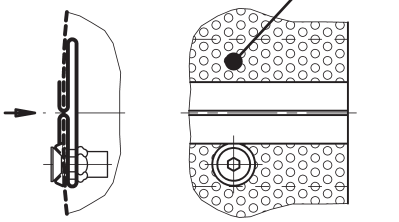

WQA - Wall displacement diffuser

Properties

- Air diffuser with low speed, low induction, with a ΔT between 0 and -6 K.
- Rectangular air displacement diffuser made of galvanised sheet steel, also available in RAL colours on request, round or angular connection spigot.
- Mounted directly on walls or integrated into walls.
- An optional Z-angle is possible for flush installation in the wall.

Dimensions

WQA-R-...-FT / -LV / -FV-...

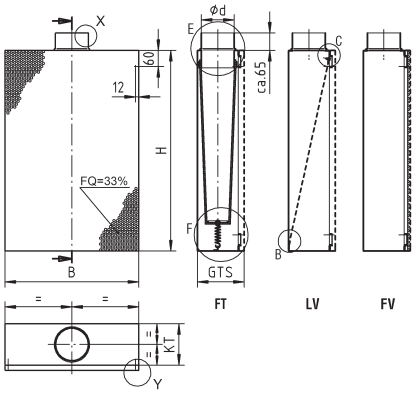

WQA-K-...-FT / -LV / -FV-...

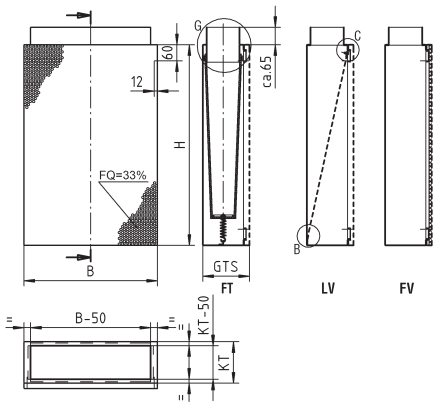

WQA-...-H-FV / -LV-...

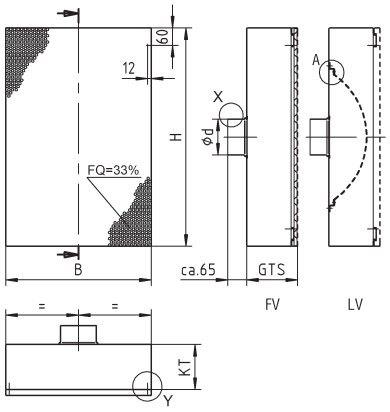

KT = GTS - 20 [mm]

Available sizes

Height		Width			
		250	500	750	1000
150	Ød	98	98	98	98
	GTS	150	150	150	150
300	Ød	98	98	123	158
	GTS	150	150	175	200
450	Ød	98	123	158	198
	GTS	150	175	200	250
500	Ød	98	123	158	198
	GTS	150	175	200	250
600	Ød	98	158	198	198
	GTS	150	200	250	250
750	Ød	123	158	198	223
	GTS	175	200	250	275
1000	Ød	123	198	223	298
	GTS	175	250	275	350

All widths and heights can be combined.
Special dimensions available at an extra charge.
Models in several pieces are available after technical clarification.

Wall displacement diffusers are dimensioned based on the face velocity on the diffuser. A_{face} = (width-40mm)*(height-40mm).

Depending on the air volume and the front surface, a front speed of 0.2 m/s in comfort and 0.4 m/s in industrial applications should not be exceeded. Subnormal supply air temperature max. 4 K; heating mode not possible.

PUSH - Displacement diffuser

Properties

- Suspended freely or fixed to walls/columns.
- Temperature difference between max. -10 K and max. +25 K.
- Manually, electrically or thermally adjustable.
- 360° or 270° throw.

Quick selection (horizontal throw)

NW		250	315	350/355	400	450	560	630
L_{WA} [dB(A)]		45	45	45	45	45	45	45
ΔP_t (Pa)		48	41	32	8	32	32	39
V_{Sup}	(m³/h)	730	1400	1450	1900	2400	3600	4500
	[l/s]	200	390	400	530	670	1000	1250

Range of air volumes

NW		250	315	350/355	400	450	560	630
V_{Sup} (m³/h)	min.	600	1200	1200	1500	2000	3000	3800
	max.	2200	4300	4500	6000	6800	11000	13000
V_{Sup} [l/s]	min.	170	330	330	420	560	830	1060
	max.	610	1190	1250	1670	1890	3060	3610

PUSH - Displacement diffuser

Dimensions

PUSH-1A

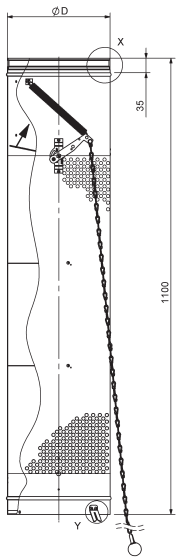

PUSH-1B

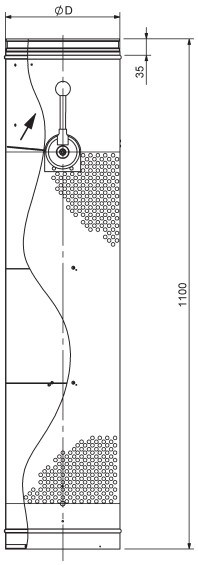

PUSH-02

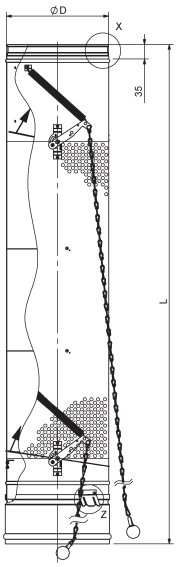

PUSH-03

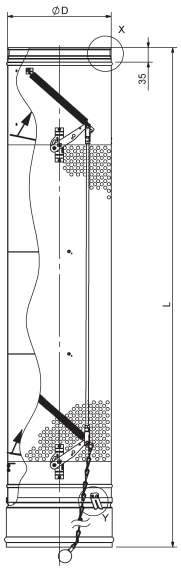

PUSH-04

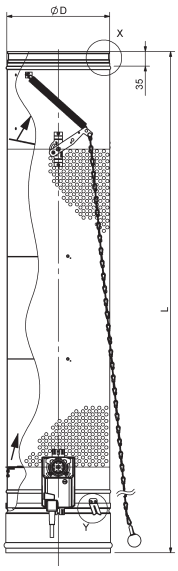

PUSH-5B

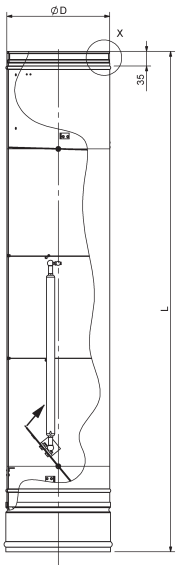

PUSH-6

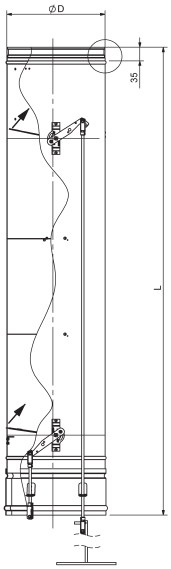

PUSH-5 B is suitable for supply air temperatures of approx. 15 °C to max. 40 °C.

Available sizes

NW	250	315	350	355	400	450	560	630
ØD	248	313	348	353	398	448	558	628
L	1220				1250		1300	1350

DAV - Ceiling displacement diffuser

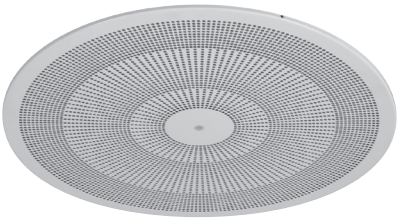

Properties

- Square or round ceiling diffuser.
- Can be used in rooms where the supply air needs to be channeled from the ceiling with low induction, e.g. in sales rooms, production workshops, kitchens, etc.
- Cooling mode to a temperature of ΔT = 6 K.
- Installation height of 2.5-4 m, flush-mounted or free-hanging.
- The DAV ceiling displacement diffuser causes a bell-shaped air movement, which can be used to form fresh air zones.

Quick selection

NW	Air volume (m³/h)	Sound power level [dB(A)]	Pressure loss (Pa)	Throw distance X+Y (m)	Max. jet velocity (m/s)	Temp. difference (K)	Installa-tion Height (m)	Off Distri-bution radius (m)	TV	Induction
310	148	25	13	3.6	0.2	6	3	0.46	0.15	6.72
	167	30	16	4.1	0.2	6	3	0.48	0.14	7.23
	188	35	21	4.7	0.2	6	3	0.5	0.13	7.82
400	268	25	15	3.2	0.2	6	3	0.44	0.17	6.03
	319	30	22	3.8	0.2	6	3	0.5	0.15	6.64
	380	35	31	4.6	0.2	6	3	0.58	0.13	7.4
500	372	25	14	3.5	0.2	6	3	0.95	0.25	3.99
	436	30	20	4.6	0.2	6	3	0.96	0.23	4.36
	511	35	27	6.1	0.2	6	3	0.96	0.21	4.79
600	583	25	13	2.9	0.2	6	3	0.92	0.27	3.7
	669	30	18	3.7	0.2	6	3	1	0.23	4.33
	768	35	23	4.6	0.2	6	3	1.07	0.2	4.99
625	583	25	13	2.9	0.2	6	3	0.92	0.27	3.7
	669	30	18	3.7	0.2	6	3	1	0.23	4.33
	768	35	23	4.6	0.2	6	3	1.07	0.2	4.99
800	1030	25	11	4.4	0.2	6	3	1.33	0.19	5.16
	1167	30	14	5.2	0.2	6	3	1.38	0.18	5.67
	1323	35	18	6.1	0.2	6	3	1.43	0.16	6.2

DAV - Ceiling displacement diffuser

Dimensions

DAV-Q-Z-... with SK-R-05-Z -...
DAV-R-Z-... with SK-R-05-Z-...

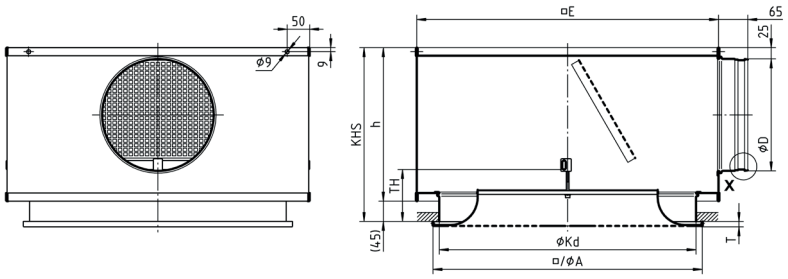

DAV-Q-A-... with SK-R-05-A-...
DAV-R-A-... with SK-R-05-A-...

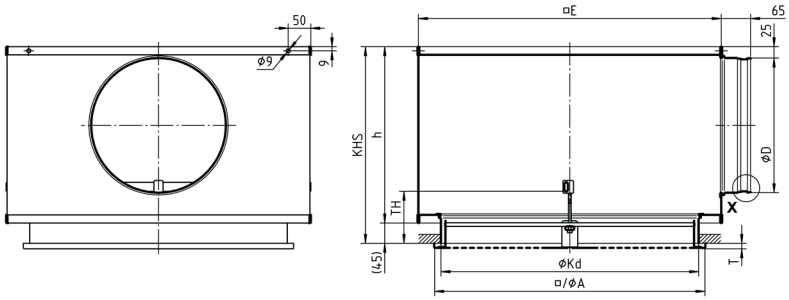

Available sizes

NW	DAV-Q-...		DAV-R-...		ØKd	□E	TH	SK-R-05-Z-...			SK-R-05-A-...			$ØD_{max}$ for ...-S5
	□A	T	ØA	T				KHS	ØD	h	KHS	ØD	h	
310	308	12	310	10	298	405	115	295	158	250	335	198	390	158
400	398	12	400	10	370	445	115	295	158	250	335	198	390	178
500	498	12	500	10	470	5445	115	335	198	290	385	248	340	198
600	598	12	600	10	570	670	115	385	248	340	435	298	390	298
625	623	12	625	10	570	670	115	385	248	340	435	298	390	298
800	798	12	800	10	770	845	135	490	353	445	490	353	445	353

KHS = standard height of box.
Special height = øD + 137 mm but at least 235 mm.
Note: for SK-R-05-Z-...-DK1/-DK2-...-S0, the height of the box changes to h = 280 mm for NW 310 and NW 400 and to h = 300 mm for NW 500.

Spigot position

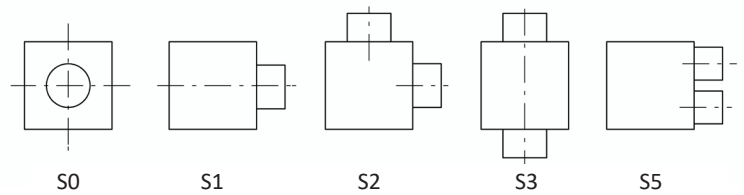

BDA - Floor swirl diffuser

Properties

- For installation in raised floors in rooms with high thermal loads, such as computer rooms.
- The high induction quickly reduces both temperature and flow velocity near the floor.
- The BDA consists of a swirl plate and a galvanised steel dirt collection basket.
- Up to 4 diffusers can be installed in a base plate.

Quick selection

BDA - Dirt collection basket 100 % open
Assumptions: 20 dB(A) - ΔT cooling = 4 K

Size	V_{Sup} (m^3/h)	Δp_t (Pa)	y (m)	l	TV
150	59	12	1.7	9.5	1.0
200	93	11	1.47	6.1	0.15

Dimensions

BDA-K/-MH/-AH

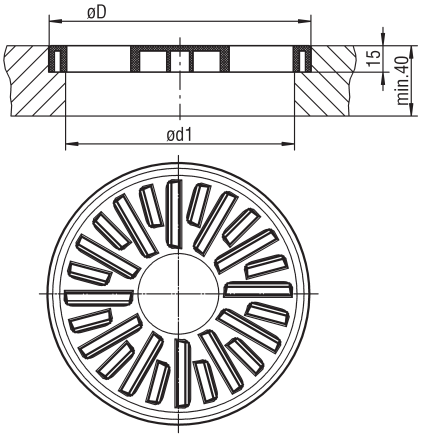

Available sizes

NW	ØD	Ød1
150	149	132
200	199	178

Dimensions of accessories

Plenum box (-AK BDA)

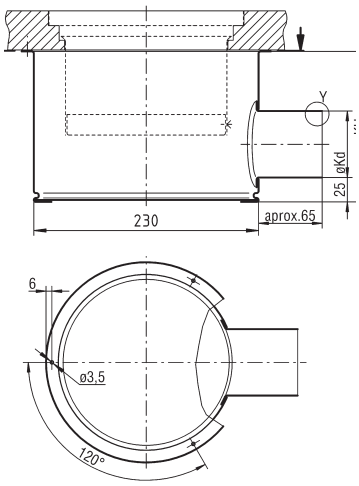

Available sizes - AK BDA

NW	ØF	ØKD	ØKd	KH
150	205	180	68	154
200	255	230	123	170

SAR/SAQ/SARP - Step swirl diffuser

Properties

- Swirl diffuser plate is made of powder-coated steel.
- Suitable for air-conditioning concert halls, auditoria, theatres and cinemas.
- Non-adjustable radial air deflection blades.
- Suitable for vertical installation in stages.

Quick selection

Assumptions: ΔT = 4 K

Size	V_{Sup} (m³/h)	L_{WA} (dB (A))	Δp_t (Pa)	v_{mean} (m/s)
110	30	30	65	0.07
	25	25	46	0.06
	20	20	33	0.05
150	60	30	45	0.08
	50	25	29	0.08
	40	20	19	0.07

Dimensions

SAR-060-...-FM-A0

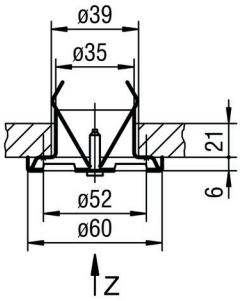

SAR/SAQ-110-...-SM-A0

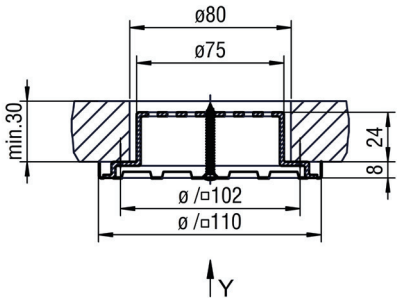

SAR/SAQ-110-...-VM-A0

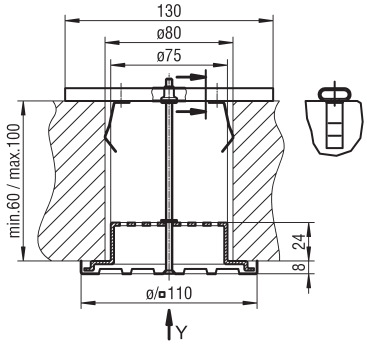

SAR-150-...-SM-A0

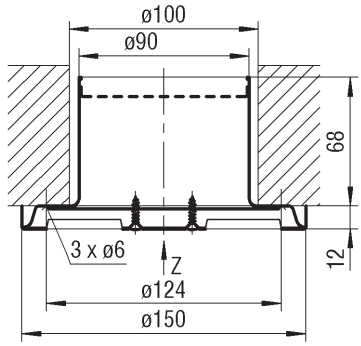

SAR-150-...-VM-A0

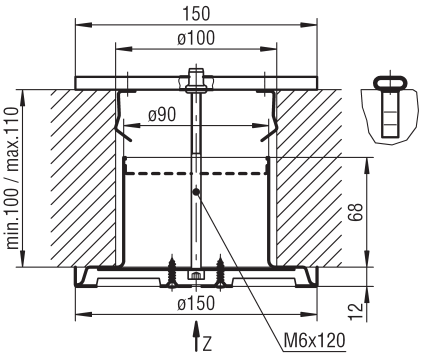

SAR-150-...-BK-A0

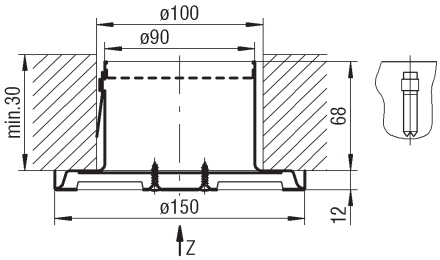

SAR/SAQ/SARP - Step swirl diffuser

SAR-150-...-SM-A1

With an inlet connection spigot with DN80 connection spigot

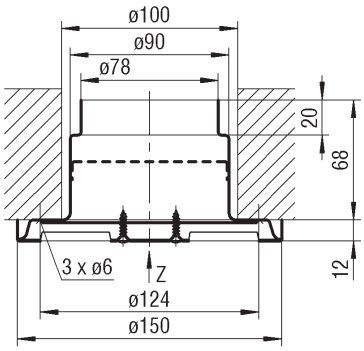

SAR-150-...-VM-A2

with connection spigot DN 125

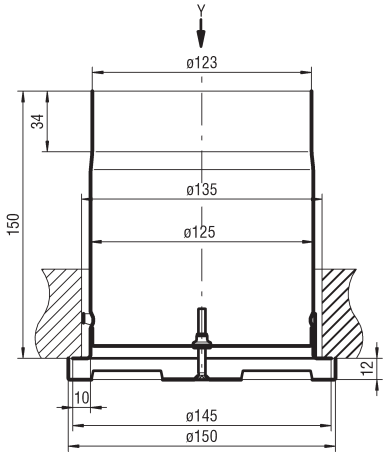

View X

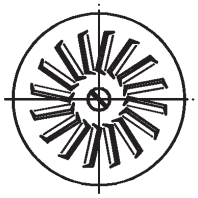

View Y

SAR

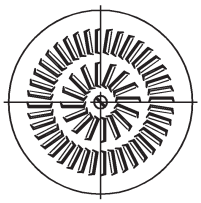

SAQ

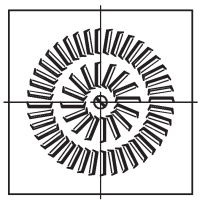

View Y

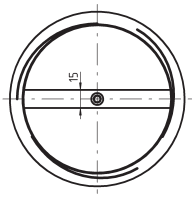

This view serves for representing the assembly of the fastening prong.

View Z

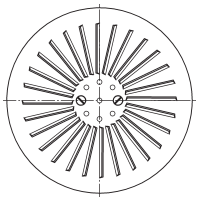

Fastening method

with screw mounting SARP-110-...-SM

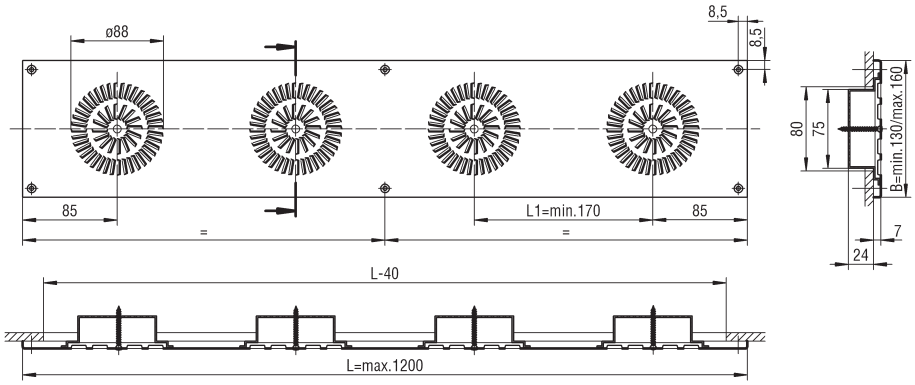

Weather protection grilles, volumetric flow controllers, silencers and fire dampers

ALAS - Weather protection grille

Properties

- Rectangular outside grille with louvre spacing of 82.5 mm.
- External air intake or return air grille with fixed, rain-repellent blades and back-fitted wire mesh grid.
- Available in a sheet steel and an aluminium design.
- Fastening with visible screws.
- Also possible as multi-part design.

Quick selection

	Intake-operated v_{face} (m/s)		Pressure-operated v_{face} (m/s)	
	1.5	2	2	2.5
L_{WA} [dB(A)]	30	39	39	46
Δp_t (Pa)	13	24	20	30

L_{WA} [dB(A)] = A-weighted sound power level relative to 1 m² ($L_{WA} = (L_{WA} / m^2) + KF$)

For intake: v_{face} 1 m/s to max. 2 m/s

For exit air: v_{face} 1.0 m/s to max. 2.5 m/s

$v_{face} = V(m^3/h) / 3600s/h/(B(mm)*(H(mm)-80mm)/1000000)$

Area correction

F (m²)	0.5	1	1.5	2	2.5	3	4
KF [dB(A)]	-3	0	+2	+3	+4	+5	+6

Correction factor with insect protection wire fabric (MW=1.45 mm, D=0.5 mm) relative to 1 m²

V_{face} (m/s)	0.5	1.0	1.5	2.0	2.5	3.0
KF [dB(A)]	+4	+6	+8	+10	+12	+14
KF (Pa)	+8	+10	+14	+18	+22	+28

Free cross-section in m² (FQ [m²])

H	B								
	400	600	800	1000	1200	1400	1600	1800	2000
345	0.0578	0.0878	0.1178	0.1478	0.1778	0.2078	0.2378	0.2678	0.2978
510	0.0963	0.1463	0.1963	0.2463	0.2963	0.3463	0.3963	0.4463	0.4963
675	0.1348	0.2048	0.2748	0.3448	0.4148	0.4848	0.5548	0.6248	0.6948
840	0.1733	0.2633	0.3533	0.4433	0.5333	0.6233	0.7133	0.8033	0.8933
1005	0.2118	0.3218	0.4318	0.5418	0.6518	0.7618	0.8718	0.9818	1.0918
1170	0.503	0.3803	0.5103	0.6403	0.7703	0.9003	1.0303	1.1603	1.2903
1335	0.2888	0.4388	0.5888	0.7388	0.8888	1.0388	1.1888	1.3388	1.4888
1500	0.3273	0.4973	0.6673	0.8373	1.0073	1.1773	1.3473	1.5173	1.6873
1665	0.3658	0.5558	0.7458	0.9358	1.1258	1.3158	1.5058	1.6958	1.8885
1830	0.4043	0.6143	0.8243	1.0343	1.2443	1.4543	1.6643	1.8743	2.0843
1995	0.4428	0.6728	0.9028	1.1328	1.3628	1.5928	1.8228	2.0528	2.2828

ALAS - Weather protection grille

Dimensions

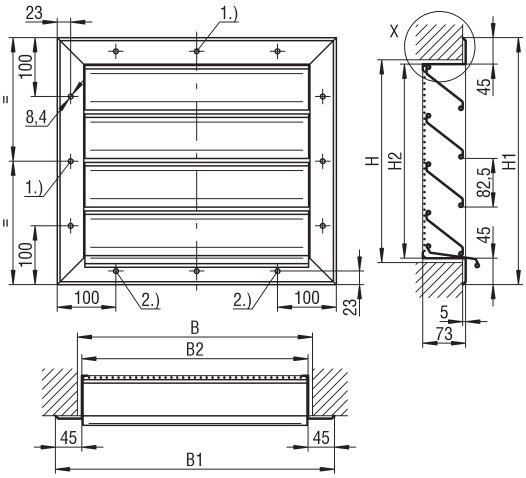

Detail X

ALAS/ALAS-Cu

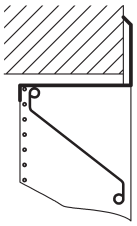

ALAS-Alu

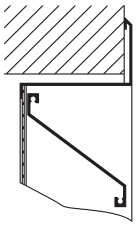

Available sizes

B	B1	B2
400	475	389
600	675	589
800	875	789
1000	1075	989
1200	1275	1189
1400	1475	1389
1600	1675	1589
1800	1875	1789
2000	2075	1989

All combined widths and heights available.

H	H1	H2
345	420	338
510	585	503
675	750	668
840	915	833
1005	1080	998
1170	1245	1163
1335	1410	1328
1500	1575	1493
1665	1740	1658
1830	1905	1823
1995	2070	1988

ALAS-F 125 - Weather protection grille

Properties

- Outside grille in individual parts with louvre spacing of 125 mm.
- Specially for installation in façades.
- Used to cover large-area air intake and outlet apertures in outside walls.
- Band design also available.

Quick selection

	Intake-operated v_{face} (m/s)		Pressure-operated v_{face} (m/s)	
	1.5	2	2	2.5
L_{WA} [dB(A)]	41	48	44	51
Δp_t (Pa)	12	21	10	18

L_{WA} [dB(A)] = A-weighted sound power level relative to 1 m² (L_{WA} = (L_{WA} / m²) + KF)

For intake: v_{face} 1 m/s to max. 2 m/s

For exit air: v_{face} 1.0 m/s to max. 2.5 m/s

v_{face} = V(m³/h) / 3600s/h/(B(mm)*(H(mm)-135mm)/1000000)

Correction factor

A_{face} (m²)	0.5	1	2	3	4	5	6	7	8
KF (-)	-3	0	+3	+4.8	+6	+7	+7.8	+8.5	+9

Free cross-section in m² (FQ [m²])

H	B					
	1000	1200	1400	1600	1800	2000
1000	0.4440	0.5328	0.6216	0.7104	0.7992	0.8880
1250	0.5680	0.6816	0.7952	0.9088	1.0224	1.1360
1500	0.6920	0.8304	0.9688	1.1072	1.2456	1.3840
1750	0.8160	0.9792	1.1424	1.3056	1.4688	1.6320
2000	0.9400	1.1280	1.3160	1.5040	1.6920	1.8800

ALAS-F 125 - Weather protection grille

Dimensions

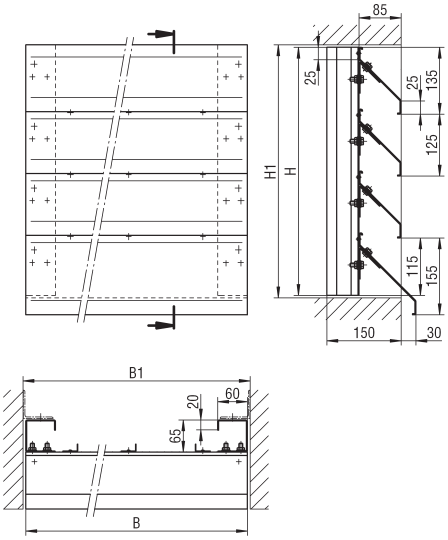

Available sizes

B	B1
1000	1010
1200	1210
1400	1410
1600	1610
1800	1810
2000	2010

H	H1	Number of blades
1000	1010	8
1250	1260	10
1500	1510	12
1750	1760	14
2000	2010	16

All combined widths and heights available.

HK - Multi-leaf damper

Properties

- Does not seal airtight.
- Multi-leaf damper with adjustable hollow profile blades.
- Frame and blades made of galvanised steel.
- Electrical or pneumatic motorisation possible.
- Certified according to ATEX Directive 2014/34/EU.

HK-P:

- Blades supported on plaster bearings.
- Temperature-resistant to a max. of +80 °C.

HK-U:

- Blades mounted on sintered bearings.
- Temperature-resistant to a max. of +100 °C.

HK-K:

- Blades supported on sintered bearings.
- Temperature-resistant to a max. of +120 °C.

Dimensions

HK-P (with plastic bearing)
HK-U (with sintered bearing)

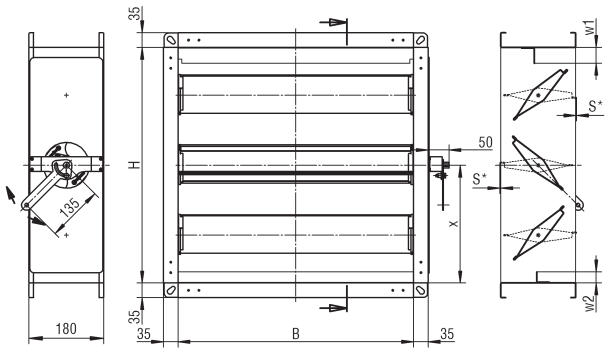

*Projection length with a damper leaf position

Blade profile

I

IV (only HK-K)

Frame profile

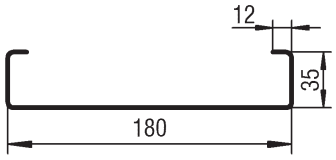

HK - Multi-leaf damper

Available sizes HK-P/HK-U

Standard series of dimensions

B	H	Number of blades	w1	w2	x	S
201	**201**	1	24	13	101	3
225	**225**	1	36	25	113	3
252	**252**	1	12	12	126	36
318	**318**	1	12	12	159	60
357	**357**	2	18	7	95	3
400	**400**	2	39	28	116	3
449	**449**	2	64	53	141	3
503	**503**	2	91	80	168	3
565	**565**	3	38	27	283	3
634	**634**	3	72	61	317	3
711	**711**	4	27	16	272	3
797	**797**	4	70	59	315	3
894	**894**	5	35	24	447	3
1003	**1003**	5	89	78	502	3
1125	**1125**	6	66	55	646	3
1262	**1262**	7	51	40	799	3
1416	**1416**	8	44	33	624	3
1588	**1588**	9	46	35	794	3
1781	**1781**	10	59	48	974	3
1998	**1998**	11	84	73	1167	3

All combined widths and heights available.

Available sizes HK-P/HK-U

B	H	Number of blades	w1	w2	x	S
200	**200**	1	23	12	96	3
250	**250**	1	12	12	121	36
300	**300**	1	12	12	146	60
400	**400**	2	39	28	116	3
500	**500**	2	89	78	329	3
700	**700**	3	55	44	296	3
800	**800**	4	72	61	478	3
1000	**1000**	5	88	77	496	3
1200	**1200**	7	20	9	596	3
1400	**1400**	8	36	25	612	3
1600	**1600**	9	52	41	796	3
1800	**1800**	10	69	58	812	3
2000	**2000**	11	85	74	996	3

All combined widths and heights available.

Note: the dimensions w1, w2 and x are rounded values!

HK - Multi-leaf damper

Dimensions

HK-K (with brass bearing)

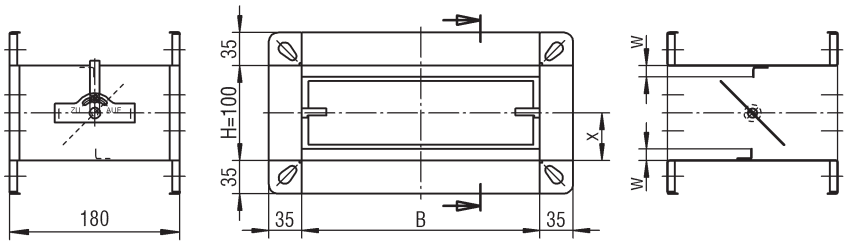

Available sizes HK-K

B
201
225
252
318
357
400

H	Number of blades	w	x
100	1	10	50

All combined widths and heights available.

JK - Multi-leaf damper

Properties

- Airtight sealing to DIN EN 1751 up to class 4 possible.
- Multi-leaf damper with adjustable hollow profile blades.
- Frame made of galvanised steel and blades made of aluminium.
- Suitable for pressures up to 1000 Pa.
- Housing leakage according to DIN EN 1751, class B, at a duct pressure of up to 1000 Pa.
- Electrical or pneumatic motorisation possible.
- Certified according to ATEX Directive 2014/34/EU.

Dimensions

JK-LP (with plastic bearing)
JK-LU (with sintered bearing)

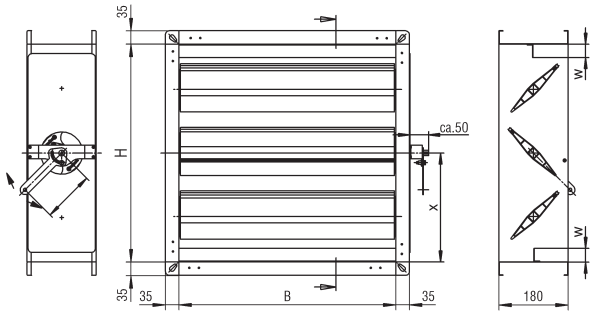

Blade profile

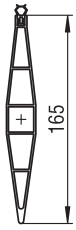

Frame profile

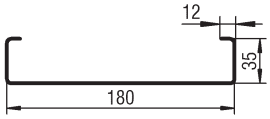

Available sizes

B	H	Number of blades	w	x
201	**201**	1	18	100
225	**225**	1	30	113
252	**252**	1	45	126
318	**-**	-	-	-
357	**357**	2	15	262
400	**400**	2	35	284
449	**449**	2	60	308
503	**503**	2	94	335
565	**565**	3	35	283
634	**634**	3	70	317
711	**711**	4	25	439
797	**797**	4	65	315
894	**894**	5	30	447
1003	**1003**	5	85	502
1125	**1125**	6	65	479
1262	**1262**	7	45	631
1416	**1416**	8	40	624
1588	**1588**	9	45	794
1781	**1781**	10	55	807
1998	**1998**	11	80	999

All combined widths and heights available.

VMPR/VMPQ - Mechanical volumetric flow controller

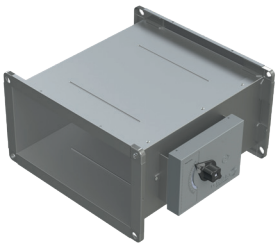

Properties

- Mechanical volumetric flow controller in round or rectangular design for constant volumetric flow regulation without auxiliary energy.
- Operating temperature: 10 - 50 °C.
- Differential pressure range: 50-1000 Pa.
- Housing leakage according to DIN EN 1751, class C.
- Housing made of galvanised sheet steel, stainless steel 1.4301 (V2A) or 1.4571 (V4A).
- Control housing made of plastic material, halogen-free, or stainless steel 1.4301 (V2A) or 1.4571 (V4A).
- Also available with electric actuator.
- Certified according to ATEX Directive 2014/34/EU.

Quick selection

Volumetric flow ranges for VMPR:

NW (mm)	V_{sup} (m³/h)		V_{sup} [l/s]	
	min.	max.	min.	max.
80	45	125	13	35
100	50	230	14	64
125	120	400	33	111
160	130	640	36	178
200	150	1050	42	292
250	300	1500	83	417
315	650	2450	181	681
400	700	4200	194	1167

Volumetric flow ranges for VMPQ:

B x H (mm)	V_{sup} (m³/h)		V_{sup} [l/s]	
	min.	max.	min.	max.
200 x 100	200	800	56	222
300 x 100	325	1075	90	299
300 x 150	250	1500	69	417
300 x 200	225	1800	63	500
400 x 200	500	2050	139	569
400 x 250	850	3200	236	889
400 x 300	700	3600	194	1000
400 x 400	900	4400	250	1222
500 x 200	650	3100	181	861
500 x 250	950	4200	264	1167
500 x 300	1200	4800	333	1333
500 x 400	1300	6200	361	1722
600 x 200	450	4100	125	1139
600 x 250	1200	4600	333	1278
600 x 300	1700	5800	472	1611
600 x 400	1900	8200	528	2278

VMPR/VMPQ - Mechanical volumetric flow controller

Dimensions

VMPR

Round design, for duct connection according to DIN EN 1506, position-independent installation.

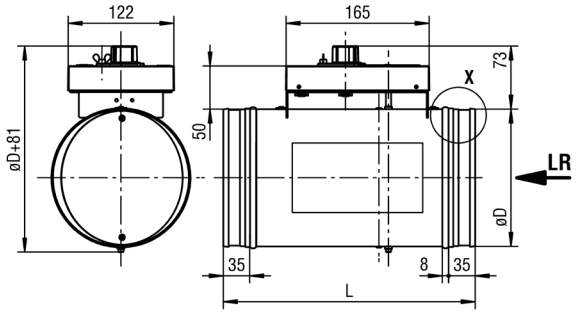

Available sizes for VMPR

NW	ØD	L
80	78	290
100	98	290
125	123	290
160	158	290
200	198	290
250	248	390
315	313	390
400	398	490

Dimensions

VMPQ

Rectangular design, for duct connection according to DIN 1505, right-hand design.

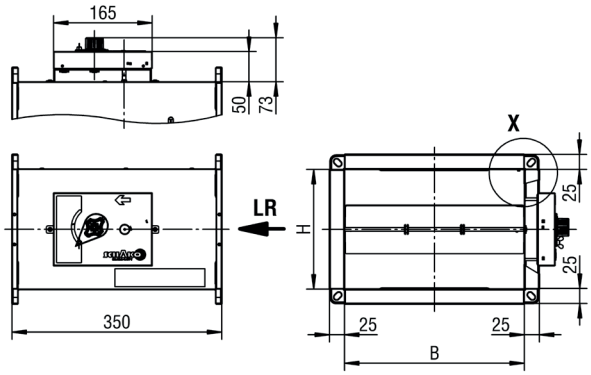

Available sizes for VMPQ

Height	Width				
	200	300	400	500	600
100	x	x	-	-	-
150	-	x	-	-	-
200	-	x	x	x	x
250	-	-	x	x	x
300	-	-	x	x	x
400	-	-	x[1.)]	x[1.)]	x[1.)]

x = available
- = not available
LR = Air flow direction
x[1.)] = with two control units

VLV55/VLV65 - Volumetric flow controller

Properties

- Can be installed without inflow area.
- Round volumetric flow controller for systems with very low ΔP (20 Pa) or low air velocities (up to 0.5 m/s).
- Installation in any position - insensitive to dust contamination.
- High control accuracy at low ΔP and low speed.
- Fitted with a venturi nozzle for measuring the differential pressure.
- Housing leakage according to DIN EN 1751, class C.
- **VLV55:** for air velocity between 0.5 and 5 m/s.
- **VLV65:** for air velocity between 1 and 8 m/s.

Quick selection

Usable volumetric flows

NW	V	VLV55		VLV65	
		V_{min} (0.5 m/s)	V_{max} (5 m/s)	V_{min} (1 m/s)	V_{max} (8 m/s)
100	(m^3/h)	13	132	26	211
	[l/s]	4	37	7	59
125	(m^3/h)	21	210	42	334
	[l/s]	6	58	12	93
160	(m^3/h)	35	346	69	554
	[l/s]	10	96	19	154
200	(m^3/h)	55	546	10	874
	[l/s]	15	152	30	243
250	(m^3/h)	86	859	172	1374
	[l/s]	24	239	48	382
315	(m^3/h)	137	1372	274	2195
	[l/s]	38	381	76	610

Available sizes

NW	ØD	d (55)	d (65)	L	Weight [kg]
100	98	53	63	330	1.5
125	123	67	79	370	1.9
160	158	86	102	420	2.5
200	198	108	128	480	3.4
250	248	136	160	570	4.8
315	313	171	203	690	7.0

Dimensions

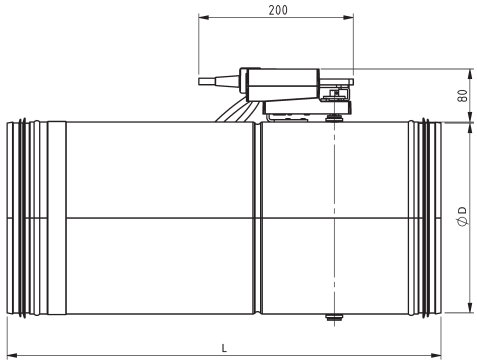

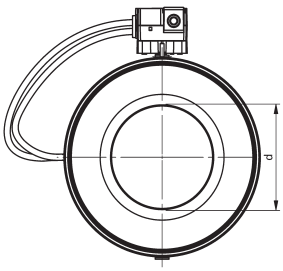

VAQS - Volumetric flow controller

Properties

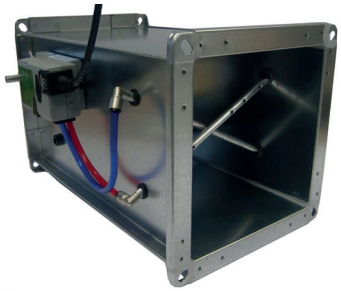

- For supply and return air systems.
- For constant or variable volumetric flows.
- Suitable for constant and variable volumetric flow, room and duct pressure control.
- Differential pressure range from 20 to 1000 Pa.
- For duct velocities between 1 and 12 m/s.
- For ambient temperatures of 0 - 50 °C.
- Housing leakage according to DIN EN 1751, class C, at a duct pressure of up to 1000 Pa.

Quick selection

Volumetric flow range

H	V		B												
			100	150	200	250	300	350	400	500	600	700	800	900	1000
100	min.	(m^3/h)	36	54	72	90	108	126	144	180	216	-	-	-	-
			10	15	20	25	30	35	40	50	60	-	-	-	-
	max.	[l/s]	432	648	864	1080	1296	1512	1728	2160	2592	-	-	-	-
			120	180	240	300	360	420	480	600	720	-	-	-	-
200	min.	(m^3/h)	-	-	144	180	216	252	288	360	432	504	576	-	-
			-	-	40	50	60	70	80	100	120	140	160	-	-
	max.	[l/s]	-	-	1728	2160	2592	3024	3456	4320	5184	6048	6912	-	-
			-	-	480	600	720	840	960	1200	1440	1680	1920	-	-
300	min.	(m^3/h)	-	-	-	-	324	378	432	540	648	756	864	972	1080
			-	-	-	-	90	105	120	150	180	210	240	270	300
	max.	[l/s]	-	-	-	-	3888	4536	5184	6480	7776	9072	10368	11664	12960
			-	-	-	-	1080	1260	1440	1800	2160	2520	2880	3240	3600
400	min.	(m^3/h)	-	-	-	-	-	504	576	720	864	1008	1152	1296	1440
			-	-	-	-	-	140	160	200	240	280	320	360	400
	max.	[l/s]	-	-	-	-	-	6048	6912	8640	10368	12096	13824	15552	17280
			-	-	-	-	-	1680	1920	2400	2880	3360	3840	4320	4800
500	min.	(m^3/h)	-	-	-	-	-	-	-	900	1080	1260	1440	1620	1800
			-	-	-	-	-	-	-	250	300	350	400	450	500
	max.	[l/s]	-	-	-	-	-	-	-	10800	12960	15120	17280	19440	21600
			-	-	-	-	-	-	-	3000	3600	4200	4800	5400	6000

Dimensions

VAQS...-DS0

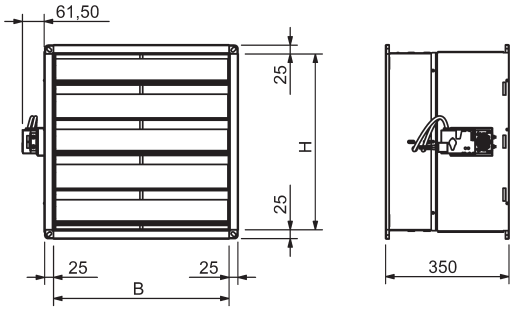

Available sizes

Height	Width												
	100	150	200	250	300	350	400	500	600	700	800	900	1000
100	x	x	x	x	x	x	x	x	x	-	-	-	-
200	-	-	x	x	x	x	x	x	x	x	x	-	-
300	-	-	-	-	x	x	x	x	x	x	x	x	x
400	-	-		-	-	x	x	x	x	x	x	x	x
500	-	-	-	-	-	-	-	x	x	x	x	x	x

X = available; -- = not available

VARS - Volumetric flow controller

Properties

- For supply and return air systems.
- Suitable for constant and variable volumetric flow, room and duct pressure control.
- Differential pressure range from 20 to 1000 Pa.
- For duct velocities between 1 and 12 m/s.
- For ambient temperatures of 0 - 50 °C.
- Sealing airtight to DIN EN 1751 Class 2 (NW 100), Class 3 (NW 125 - 400).

Quick selection

Volumetric flow range

NW	V_{min} at 1 m/s		V_{max} at 1 m/s	
	(m³/h)	[l/s]	(m³/h)	[l/s]
100	27	7	319	89
125	42	12	505	140
160	70	19	836	232
200	110	30	1317	366
225	140	39	1672	464
250	1773	48	2070	575
280	217	60	2603	723
315	275	76	3303	918
355	351	97	4204	1168
400	446	124	5438	1486

Dimensions

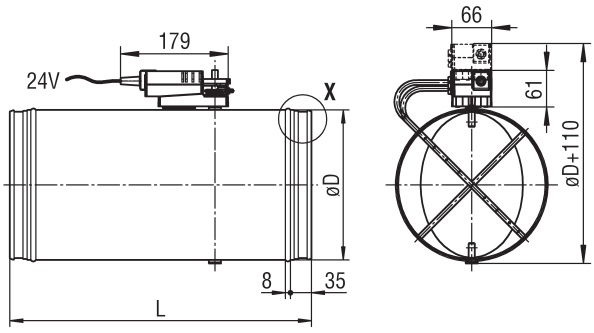

Available sizes

NW	ØD	L
100	98	300
125	123	300
160	158	300
200	198	400
225	223	400
250	248	400
280	278	500
315	313	500
355	353	500
400	398	500

VRAQ - Volumetric flow controller

Properties

- For supply and return air systems.
- For constant CAV or variable VAV systems.
- For volumetric flow and linear pressure control.
- In differential pressure range 50 - 1000 Pa.
- Housing leakage according to DIN EN 1751, class C, at a duct pressure of up to 1000 Pa.
- Leakage with closed damper blade according to DIN EN 1751, up to class 4, at a duct pressure of up to 1000 Pa.
- With DD varnish coating for aggressive media.
- For regulating the air velocity in the duct in the range 1(2)-12 m/s (electric).

Quick selection

Volumetric flow ranges H = 100-180/B = 140-565

H	V		B											
			140	160	180	201	225	252	318	357	400	449	503	565
100	min.	(m^3/h)	51	58	65	73	81	90	115	-	-	-	-	-
			14	16	18	20	23	25	32	-	-	-	-	-
	max.	[l/s]	605	691	778	870	972	1080	1374	-	-	-	-	-
			168	192	216	242	270	300	382	-	-	-	-	-
140	min.	(m^3/h)	71	81	91	102	114	127	161	180	202	-	-	-
			20	23	25	28	32	36	45	50	56	-	-	-
	max.	[l/s]	847	968	1089	1216	1361	1524	1923	2159	2419	-	-	-
			235	269	302	338	378	423	534	600	672	-	-	-
160	min.	(m^3/h)	81	92	104	116	130	145	183	206	231	259	-	-
			23	26	29	32	36	41	51	57	64	72	-	-
	max.	[l/s]	968	1106	1244	1389	1555	1742	2198	2468	2765	3103	-	-
			269	307	346	386	432	484	611	685	768	862	-	-
180	min.	(m^3/h)	91	104	117	130	146	164	206	232	259	291	326	366
			25	29	33	36	41	46	57	65	72	81	91	102
	max.	[l/s]	1089	1244	1400	1563	1750	1960	2473	2776	3110	3491	3911	4393
			302	346	389	434	486	544	687	771	864	970	1086	1220

MIN. values refer to air velocity of 1 m/s.
MAX. values refer to air velocity of 12 m/s.

VRAQ - Volumetric flow controller

Volumetric flow ranges H = 201-1003/B = 201-1003
with electric controller (standard)

H	V		B													
			201	225	252	318	357	400	449	503	565	634	711	797	894	1003
201	(m^3/h)	min.	146	163	183	230	259	290	325	364	409	459	515	577	-	-
		max.	1745	1954	2188	2761	3100	3473	3899	4368	4906	5505	6174	6921	-	-
	[l/s]	min.	41	46	51	64	72	81	91	101	114	128	143	160	-	-
		max.	485	543	608	767	861	965	1083	1213	1363	1529	1715	1923	-	-
225	(m^3/h)	min.	163	183	204	258	289	324	364	408	458	514	576	646	-	-
		max.	1954	2187	2449	3091	3470	3888	4364	4889	5492	6162	6911	7747	-	-
	[l/s]	min.	46	54	57	72	81	90	101	113	127	143	160	180	-	-
		max.	543	608	680	859	964	1080	1212	1358	1526	1712	1920	2152	-	-
252	(m^3/h)	min.	183	204	229	289	324	363	408	457	513	575	645	723	811	-
		max.	2188	2449	2743	3462	3886	4355	4888	5476	6151	6902	7740	8676	9732	-
	[l/s]	min.	51	57	64	80	90	101	113	127	143	160	179	201	226	-
		max.	608	680	762	962	1079	1210	1358	1521	1709	1917	2150	2410	2703	-
318	(m^3/h)	min.	230	258	289	364	409	458	514	576	647	726	814	913	1024	-
		max.	2761	3091	3462	4369	4904	5495	6168	6910	7762	8710	9767	10949	12281	-
	[l/s]	min.	64	72	80	101	114	127	143	160	180	202	226	254	285	-
		max.	767	859	962	1214	1362	1526	1713	1919	2156	2419	2713	3041	3411	-
357	(m^3/h)	min.	259	289	324	409	459	514	577	647	726	815	914	1025	1149	1289
		max.	3100	3470	3886	4904	5506	6169	6925	7757	8714	9778	10965	12292	13788	15469
	[l/s]	min.	72	81	90	114	128	143	161	180	202	227	254	285	319	358
		max.	861	964	1079	1362	1529	1714	1924	2155	2421	2716	3046	3414	3830	4297
400	(m^3/h)	min.	290	324	363	458	514	576	647	725	814	913	1024	1148	1288	1445
		max.	3473	3888	4355	5495	6169	6912	7759	8692	9763	10956	12286	13772	15448	17332
	[l/s]	min.	81	90	101	127	143	160	180	202	226	254	285	319	358	402
		max.	965	1080	1210	1526	1714	1920	2155	2414	2712	3043	3413	3826	4291	4814
449	(m^3/h)	min.	325	364	408	514	577	647	726	813	914	1025	1150	1289	1445	1621
		max.	3899	4364	4888	6168	6925	7759	8709	9757	10959	12298	13791	15459	17341	19455
	[l/s]	min.	91	101	113	143	161	180	202	226	254	285	320	358	402	451
		max.	1083	1212	1358	1713	1924	2155	2419	2710	3044	3416	3831	4294	4817	5404
503	(m^3/h)	min.	364	408	457	576	647	725	813	911	1023	1148	1288	1443	1619	1816
		max.	4368	4889	5476	6910	7757	8692	9757	10930	12277	13777	15450	17318	19426	21795
	[l/s]	min.	101	113	127	160	180	202	226	253	284	319	358	401	450	505
		max.	1213	1358	1521	2669	2155	2414	2710	3036	3410	3827	4292	4811	5396	6054
565	(m^3/h)	min.	409	458	513	647	726	814	914	1023	1149	1290	1446	1621	1819	2040
		max.	4906	5492	6151	7762	8714	9763	10959	12277	13791	15475	17354	19453	21821	24481
	[l/s]	min.	114	127	143	180	202	226	254	284	319	358	402	451	505	567
		max.	1363	1526	1709	2156	2421	2712	3044	3410	3831	4299	4821	5404	6061	6800
634	(m^3/h)	min.	-	-	575	726	815	913	1025	1148	1290	1447	1623	1819	2041	2289
		max.	-	-	6902	8710	9778	10956	12298	13777	15475	17364	19473	21829	24486	27471
	[l/s]	min.	-	-	160	202	227	254	285	319	358	402	451	506	567	636
		max.	-	-	1917	2419	2716	3043	3416	3827	4299	4823	5409	6064	6802	7631

VRAQ - Volumetric flow controller

Volumetric flow ranges H = 201-1003/B = 201-1003
with electric controller (standard)

H	V		B													
			201	225	252	318	357	400	449	503	565	634	711	797	894	1003
711	(m^3/h)	min.	-	-	645	814	914	1024	1150	1288	1446	1623	1820	2040	2289	2568
		max.	-	-	7740	9767	10965	12286	13791	15450	17354	19473	21839	24480	27459	30807
	[l/s]	min.	-	-	179	226	254	285	320	358	402	451	506	567	636	713
		max.	-	-	2150	2713	3046	3413	3831	4292	4821	5409	6066	6800	7628	8558
797	(m^3/h)	min.	-	-	-	912	1025	1148	1289	1443	1621	1819	2040	2287	2565	2878
		max.	-	-	-	10949	12292	13772	15459	17318	19453	21829	24480	27441	30781	34534
	[l/s]	min.	-	-	-	253	285	319	358	401	451	506	567	636	713	800
		max.	-	-	-	3041	3414	3826	4294	4811	5404	6064	6800	7623	8550	9593
894	(m^3/h)	min.	-	-	-	1023	1149	1288	1445	1619	1819	2041	2289	2565	2877	3228
		max.	-	-	-	12281	13788	15448	17341	19426	21821	24486	27459	30781	34527	38737
	[l/s]	min.	-	-	-	284	319	358	402	450	505	567	636	713	799	897
		max.	-	-	-	3411	3830	4291	4817	5396	6061	6802	7628	8550	9591	10760
1003	(m^3/h)	min.	-		-	1148	1289	1445	1621	1816	2040	2289	2568	2878	3228	3622
		max.	-	-	-	13779	15469	17332	19455	21795	24481	27471	30807	34534	38737	43460
	[l/s]	min.	-	-	-	319	358	402	451	505	567	636	713	800	897	1006
		max.	-	-	-	3828	4297	4814	5404	6054	6800	7631	8558	9593	10760	12072

MIN. values refer to air velocity of 1 m/s.
MAX. values refer to air velocity of 12 m/s.
H = 318 for VRAQ-JP/VRAQ-JU not available.
- = not available

Dimensions

H = 100-180 / W = 140-565
with electric controller
VRAQ-...-DS0, without acoustic cladding

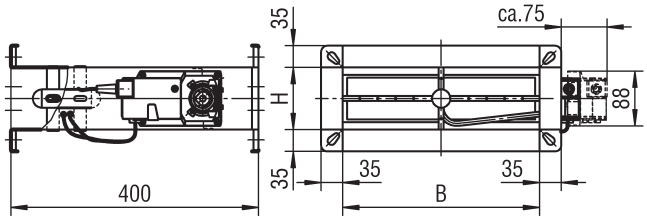

Available sizes

Height	Width											
	140	160	180	201	225	252	318	357	400	449	503	565
100	x	x	x	x	x	x	x	-	-	-	-	-
140	x	x	x	x	x	x	x	x	x	-	-	-
160	x	x	x	x	x	x	x	x	x	x	-	-
180	x	x	x	x	x	x	x	x	x	x	x	x

All combined widths and heights available
x = available
- = not available

VRAQ - Volumetric flow controller

Dimensions

H = 201-1003 / W = 201-1003
with electric controller
VRAQ-...-DS0, without acoustic cladding

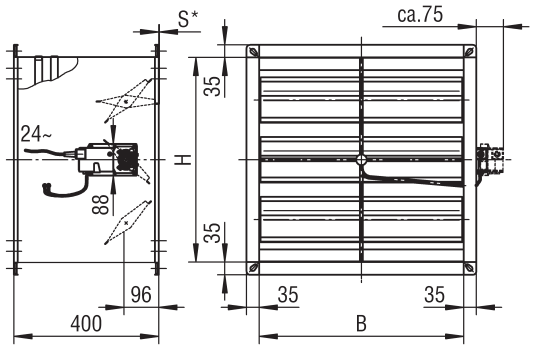

H = 201-1003 / W = 201-1003
with pneumatic controller
VRAQ-...-DS0, without acoustic cladding

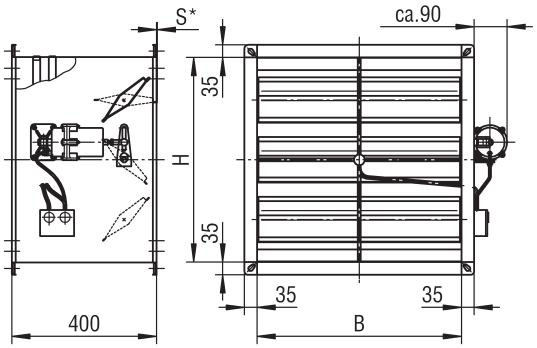

Available sizes (VRAQ-HU-... / VRAQ-HP-...)

Height	Width													
	201	225	252	318	400	449	503	565	634	711	797	894	1003	S*
201	x	x	x	x	x	x	x	x	x	x	x	-	-	-
225	x	x	x	x	x	x	x	x	x	x	x	-	-	-
252	x	x	x	x	x	x	x	x	x	x	x	x	-	30
318	x	x	x	x	x	x	x	x	x	x	x	x	x	54
357	x	x	x	x	x	x	x	x	x	x	x	x	x	-
400	x	x	x	x	x	x	x	x	x	x	x	x	x	-
449	x	x	x	x	x	x	x	x	x	x	x	x	x	-
503	x	x	x	x	x	x	x	x	x	x	x	x	x	-
565	x	x	x	x	x	x	x	x	x	x	x	x	x	-
634	-	-	x	x	x	x	x	x	x	x	x	x	x	-
711	-	-	x	x	x	x	x	x	x	x	x	x	x	-
797	-	-	-	x	x	x	x	x	x	x	x	x	x	-
894	-	-	-	x	x	x	x	x	x	x	x	x	x	-
1003	-	-	-	x	x	x	x	x	x	x	x	x	x	-

All combined widths and heights available.
S* = projection length with a damper leaf position of 100 % OPEN.
x = available
- = not available

Available sizes (VRAQ-JU-... / VRAQ-JP-...)

Height	Width													
	201	225	252	318	400	449	503	565	634	711	797	894	1003	S*
201	x	x	x	x	x	x	x	x	x	x	x	-	-	-
225	x	x	x	x	x	x	x	x	x	x	x	-	-	-
252	x	x	x	x	x	x	x	x	x	x	x	x	-	-
318	-	-	-	-	-	-	-	-	-	-	-	-	-	-
357	x	x	x	x	x	x	x	x	x	x	x	x	x	-
400	x	x	x	x	x	x	x	x	x	x	x	x	x	-
449	x	x	x	x	x	x	x	x	x	x	x	x	x	-
503	x	x	x	x	x	x	x	x	x	x	x	x	x	-
565	x	x	x	x	x	x	x	x	x	x	x	x	x	-
634	-	-	x	x	x	x	x	x	x	x	x	x	x	-
711	-	-	x	x	x	x	x	x	x	x	x	x	x	-
797	-	-	-	x	x	x	x	x	x	x	x	x	x	-
894	-	-	-	x	x	x	x	x	x	x	x	x	x	-
1003	-	-	-	x	x	x	x	x	x	x	x	x	x	-

All combined widths and heights available.
S* = projection length with a damper leaf position of 100 % OPEN.
x = available
- = not available

VRAR - Volumetric flow controller

Properties

- For supply and return air systems.
- For constant CAV or variable VAV systems.
- For volumetric flow and linear pressure control.
- In differential pressure range 50 - 1000 Pa.
- Housing leakage according to DIN EN 1751, class C, at a duct pressure of up to 1000 Pa.
- Leakage at closed damper blade according to DIN EN 175, class 4 (size NW 100 - 125 class 3) at a duct pressure of up to 1000 Pa.
- With DD varnish coating for aggressive media.
- For regulating the air velocity in the duct in the range 1(2)-12 m/s (electric).

Quick selection

Volumetric flow range

VRAR-A..., with electric controller

NW	V	Belimo/ Gruner compact	Belimo VRU-...		Alternative controller brands	
		V_{min} (1 m/s)	V_{min} (1 m/s)	V_{max} (12 m/s)	V_{min} (2 m/s)	V_{max} (12 m/s)
100	(m^3/h)	26	26	319	53	319
	[l/s]	7	7	89	15	89
125	(m^3/h)	42	42	505	84	505
	[l/s]	11	11	140	23	140
160	(m^3/h)	69	69	836	139	836
	[l/s]	19	19	232	39	232
200	(m^3/h)	109	109	1317	219	1317
	[l/s]	30	30	366	61	366
225	(m^3/h)	139	139	1672	279	1672
	[l/s]	39	39	464	78	464
280	(m^3/h)	172	172	2070	345	2070
	[l/s]	48	48	575	96	575
315	(m^3/h)	217	217	2603	434	2603
	[l/s]	60	60	723	121	723
355	(m^3/h)	275	275	3303	550	3303
	[l/s]	76	76	918	153	918
400	(m^3/h)	350	350	4204	701	4204
	[l/s]	97	97	1168	195	1168
500	(m^3/h)	445	445	5348	891	5348
	[l/s]	124	124	1486	248	1486
630	(m^3/h)	698	698	8381	1397	8381
	[l/s]	194	194	2328	388	2328

VRAR-A..., with pneumatic controller

NW	V	Sauter RLP	
		V_{min} (3 m/s)	V_{max} (12 m/s)
100	(m^3/h)	80	319
	[l/s]	22	89
125	(m^3/h)	128	505
	[l/s]	36	140
160	(m^3/h)	209	836
	[l/s]	58	232
200	(m^3/h)	329	1317
	[l/s]	91	366
225	(m^3/h)	418	1672
	[l/s]	116	464
280	(m^3/h)	517	2070
	[l/s]	144	575
315	(m^3/h)	651	2603
	[l/s]	181	723
355	(m^3/h)	826	3303
	[l/s]	229	918
400	(m^3/h)	1051	4204
	[l/s]	292	1168
500	(m^3/h)	1337	5348
	[l/s]	371	1486
630	(m^3/h)	2095	8381
	[l/s]	582	2328

VRAR - Volumetric flow controller

Dimensions

with electric controller
VRAR-...-DS0, without acoustic cladding

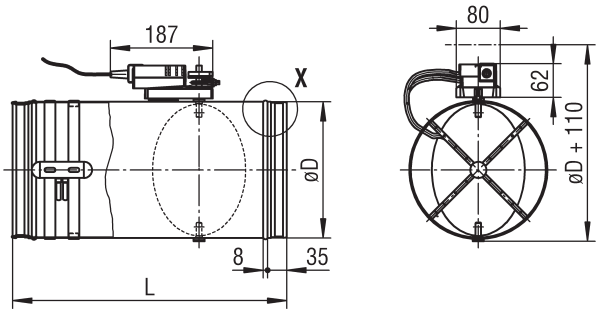

with pneumatic controller
VRAR-...-DS0, without acoustic cladding

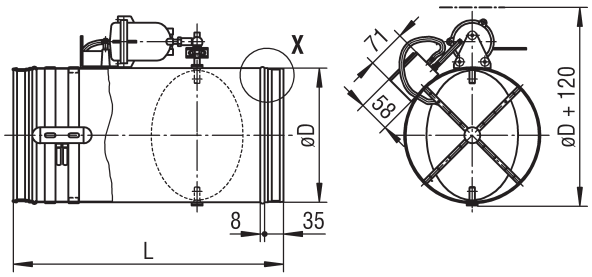

Available sizes

NW	ØD	ØD1	ØD2	L	M
100	98	104	140	340	270
125	123	129	165	360	290
160	158	164	200	410	325
200	198	204	240	450	340
225	223	229	265	475	355
250	248	254	290	500	380
280	278	284	320	550	430
315	313	319	355	600	480
355	353	359	395	650	530
400	398	404	440	700	580
500	498	504	540	850	730
630	628	634	670	950	830

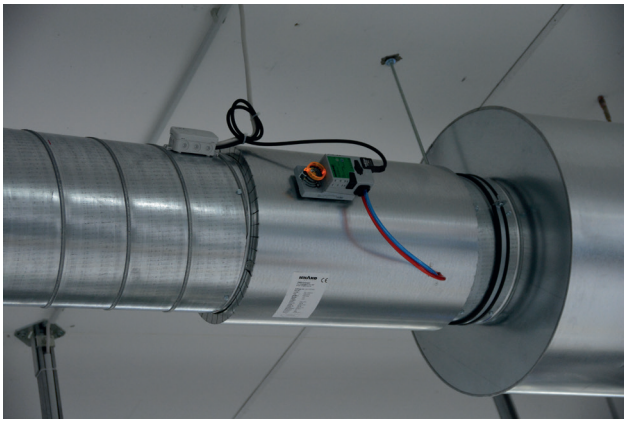

PIANO - Sound-damped volumetric flow controller

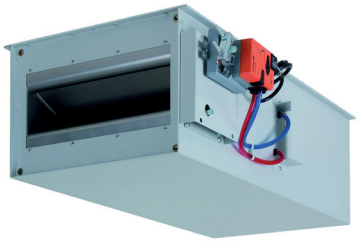

Properties

- Can be installed without inflow area.
- For supply and return air systems.
- For constant or variable volumetric flows.
- Suitable for constant and variable volumetric flow, room and duct pressure control.
- Differential pressure range from 20 to 1000 Pa.
- For air velocities in the silencer gap between 2.0 and 12 m/s.
- For reducing the flow generated noise, type Piano-S has a longer silencer unit.
- Additional flat-bed acoustic cladding to reduce radiated noise available at an extra charge.

Quick selection

Volumetric flow range

NW	V_{Sup}/V_{return}	Electric controller		Pneumatic controller	
		V_{min} from 1 m/s	V_{max} to 12 m/s	V_{min} from 3 m/s	V_{max} to 12 m/s
1	(m^3/h)	36	432	108	432
	[l/s]	10	120	30	120
2	(m^3/h)	58	690	173	690
	[l/s]	16	192	48	192
3	(m^3/h)	91	1086	272	1086
	[l/s]	25	300	76	300
4	(m^3/h)	144	1728	432	1728
	[l/s]	40	480	120	480
5	(m^3/h)	231	2766	691	2766
	[l/s]	64	768	192	768
6	(m^3/h)	174	2082	518	2082
	[l/s]	48	576	144	576
7	(m^3/h)	272	3264	816	3264
	[l/s]	76	906	227	906
8	(m^3/h)	432	5184	1296	5184
	[l/s]	120	1440	360	1440

PIANO - Sound-damped volumetric flow controller

Dimensions

PIANO/PIANO-S

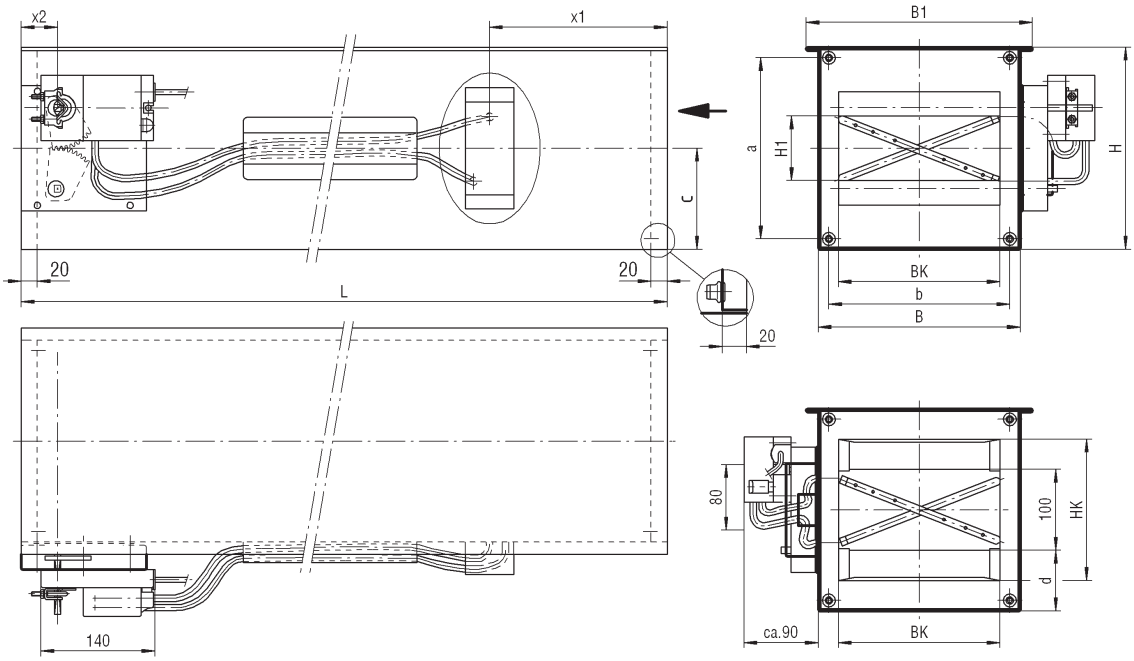

Detail Y

supply air **return air**

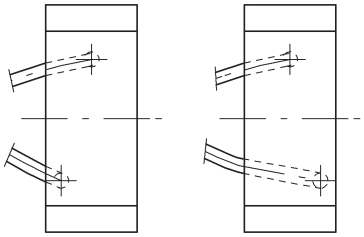

Available sizes

NW	L		B	B1	BK	H	H1	HK	a	b	c	d	Supply air		Return air		
													X1	X2	X1		X2
	PIANO	PIANO -S													PIANO	PIANO -S	
1	800	1250	175	205	125	250	80	175	224	149	125.0	75.0	250	45	390	840	110
2	800	1250	250	280	200	250	80	175	224	224	125.0	75.0	250	45	390	850	110
3	800	1250	365	395	315	250	80	175	224	339	125.0	75.0	250	45	400	850	110
4	800	1250	550	580	500	250	80	175	224	524	125.0	75.0	250	45	400	850	110
5	800	1250	850	880	800	250	80	175	224	824	125.0	75.0	250	45	400	850	110
6	1250	2000	475	515	400	375	120	300	348	448	187.5	137.5	360	45	625	1375	110
7	1250	2000	705	745	630	375	120	300	348	678	187.5	137.5	360	45	625	1375	110
8	1250	2000	1075	1115	1000	375	120	300	348	1048	187.5	137.5	360	45	625	1375	110

EBE/EBP - Pressure-reducing box

Properties

- For supply and return air systems.
- With integrated silencer to reduce flow generated noise.
- For constant or variable volumetric flows.
- Suitable for constant and variable volumetric flow, room and duct pressure control.
- Differential pressure range from 50 to 1000 Pa.
- For duct velocities of 1 - 12 m/s with EBE or 3 - 12 m/s with EBP.

Quick selection

Volumetric flow range

for EBE with electric controller

NW	V	Belimo Compact	Belimo/Siemens/Gruner		Gruner (on request)	
		V_{min} (1 m/s)	V_{min} (2 m/s)	V_{max} (12 m/s)	V_{min} (1 m/s)	V_{max} (12 m/s)
100	(m^3/h)	26	53	319	27	319
	[l/s]	7	15	89	8	89
125	(m^3/h)	42	84	505	42	505
	[l/s]	11	23	140	12	140
160	(m^3/h)	69	139	836	70	836
	[l/s]	19	39	232	19	232
200	(m^3/h)	109	219	1317	110	1317
	[l/s]	30	61	366	31	366
250	(m^3/h)	172	345	2070	172	2070
	[l/s]	48	96	575	48	575
315	(m^3/h)	275	550	3303	275	3303
	[l/s]	76	153	918	76	918
400	(m^3/h)	445	891	5348	446	5348
	[l/s]	124	248	1486	124	1486

for EBE with pneumatic controller

NW	V	Sauter RLP	
		V_{min} (3 m/s)	V_{max} (12 m/s)
100	(m^3/h)	80	319
	[l/s]	22	89
125	(m^3/h)	128	505
	[l/s]	36	140
160	(m^3/h)	209	836
	[l/s]	58	232
200	(m^3/h)	329	1317
	[l/s]	91	366
250	(m^3/h)	517	2070
	[l/s]	144	575
315	(m^3/h)	826	3303
	[l/s]	229	918
400	(m^3/h)	1337	5348
	[l/s]	371	1486

EBE/EBP - Pressure-reducing box

Dimensions

EBE / EBP-Z, for supply air

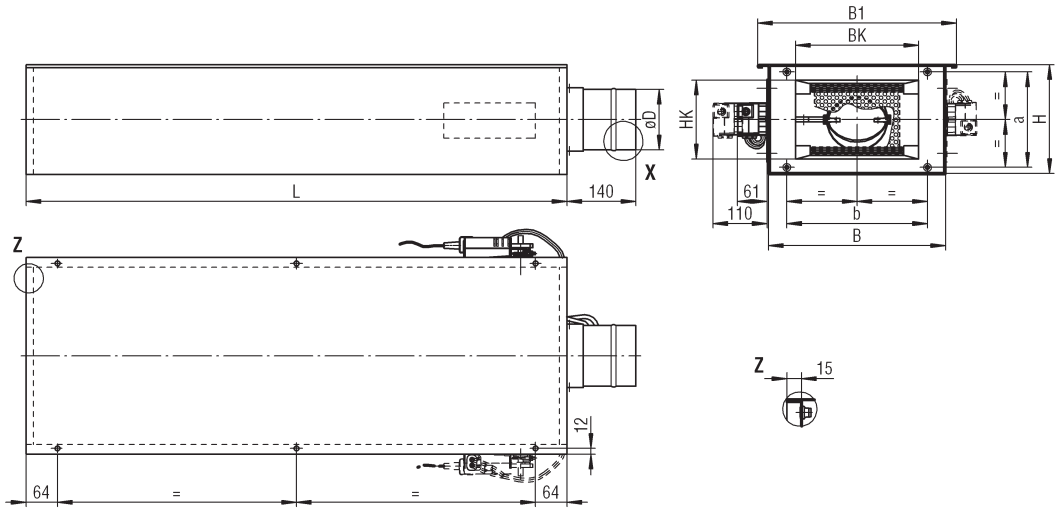

EBE / EBP-A for return air

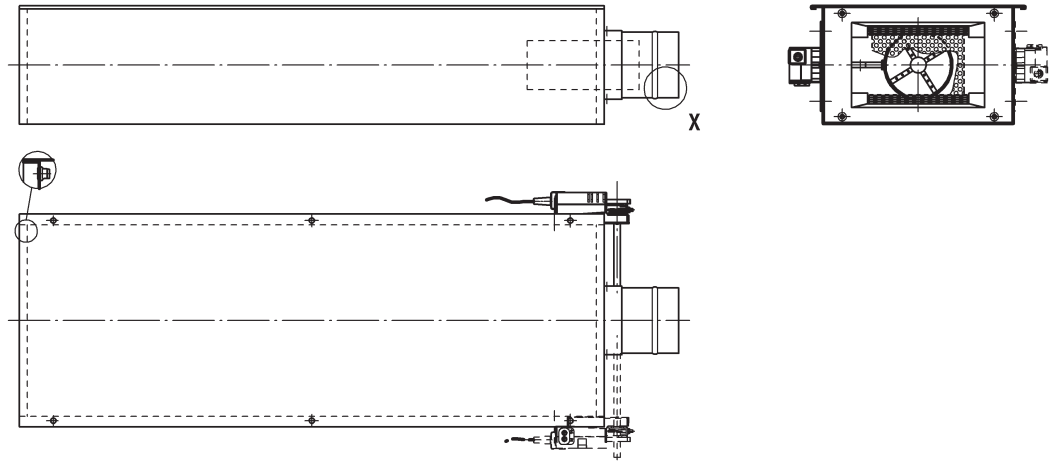

Available sizes

NW	B	B1	BK	H	HK	L	ØD	a	b
100	320	360	210	200	140	1100	98	174	244
125	360	400	250	220	160	1100	123	194	286
160	480	520	370	230	170	1100	158	204	399
200	580	620	470	260	200	1400	198	234	504
250	700	740	590	290	230	1500	248	259	624
315	880	920	770	340	280	1500	313	309	804
400	1000	1040	890	440	385	1835	398	409	924

For size 400, the housing consists of two joined parts.

MBE/MBP - Mixing box

Properties

- For supply air systems.
- For constant or variable volumetric flows.
- For duct velocities:
  - MBE (electric) = 4 - 12 m/s
  - MBP (pneumatic) = 4 - 12 m/s
- Design for spiral duct connection according to DIN 24145.
- With integrated silencer to reduce flow generated noise.

Quick selection

Volumetric flow range

MBE (constant or min./max)

NW	V	Hot air controller total air volume, electric		Cold air control variable electrical	
		V_{min} (4 m/s)	V_{max} (12 m/s)	V_{min} (2 m/s)	V_{max} (12 m/s)
100	(m^3/h)	106	319	53	319
	[l/s]	30	89	15	89
125	(m^3/h)	168	505	84	505
	[l/s]	47	140	23	140
160	(m^3/h)	279	836	139	836
	[l/s]	77	232	37	232
200	(m^3/h)	439	1317	219	1317
	[l/s]	122	366	61	366
250	(m^3/h)	690	2070	345	2070
	[l/s]	192	575	96	575
315	(m^3/h)	1101	3303	550	3303
	[l/s]	306	918	153	918
400	(m^3/h)	1783	5348	891	5348
	[l/s]	495	1486	248	1486

MBP (constant or min./max)

NW	V	Hot air control pneumatic		Cold air control variable pneumatic	
		V_{min} (4 m/s)	V_{max} (12 m/s)	V_{min} (4 m/s)	V_{max} (12 m/s)
100	(m^3/h)	106	319	106	319
	[l/s]	30	89	30	89
125	(m^3/h)	168	505	168	505
	[l/s]	47	140	47	140
160	(m^3/h)	279	836	279	836
	[l/s]	77	232	77	232
200	(m^3/h)	439	1317	439	1317
	[l/s]	122	366	122	366
250	(m^3/h)	690	2070	690	2070
	[l/s]	192	575	192	575
315	(m^3/h)	1101	3303	1101	3303
	[l/s]	306	918	306	918
400	(m^3/h)	1783	5348	1783	5348
	[l/s]	495	1486	495	1486

MBE/MBP - Mixing box

Dimensions

MBE

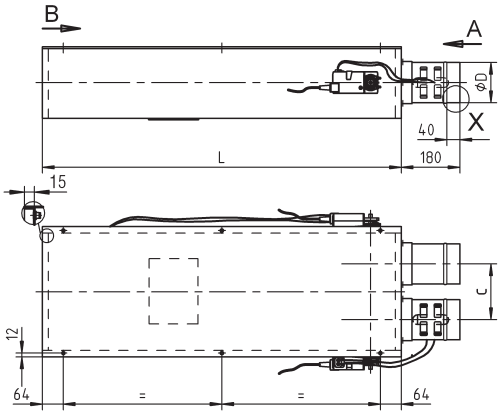

MBP

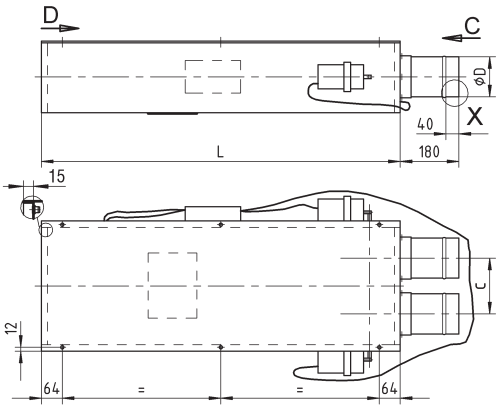

View A

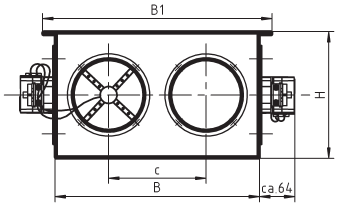

View B

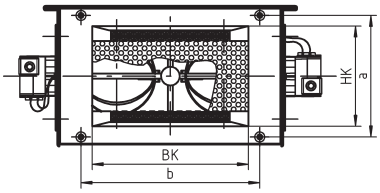

View C

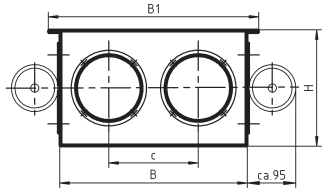

View D

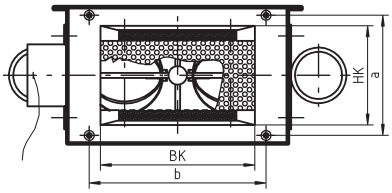

Available sizes

NW	B	B1	BK	H	HK	L	ØD	a	b	c
100	360	400	250	220	160	1100	98	194	286	178
125	480	520	370	230	170	1100	123	204	399	238
160	580	620	470	260	200	1400	158	234	504	288
200	700	740	590	290	230	1500	198	259	624	348
250	880	920	770	340	280	1500	248	309	804	438
315	1000	1040	890	440	385	1835	313	409	924	498
400	1400	1440	1290	490	430	1835	398	459	1324	698

For sizes 315 and 400, the housing consists of two parts mounted ex works.

MWS/MWK - Mineral wool silencers

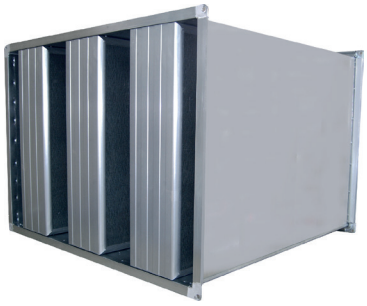

Properties

- Manufactured according to the hygienic standards of VDI 6022, tested according to DIN EN ISO 7235 and non-flammable according to DIN EN 13501-1 class A1.
- Baffles with frame profile in nozzle design for substantial reduction of the pressure loss.
- Certified according to ATEX Directive 2014/34/EU.

MWK-OB:

- Baffle frame made of galvanised sheet steel.

MWK-LL:

- The baffle frame and perforated plate are made of galvanised sheet steel.

MWK-MB:

- Covered on one side with resonance plate.
- The baffle frame and sectioned sheet are made of galvanised sheet steel.

MWK-LB:

- Covered, offset, on one side with resonance and perforated plate.
- The baffle frame, sectioned sheet and perforated plate are made of galvanised sheet steel.

MWK-OB/MWS-OB

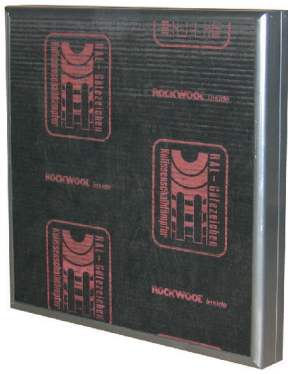

MWK-LL/MWS-LL

MWK-MB/MWS-MB

MWK-LB/MWS-LB

MWS/MWK - Mineral wool silencers

Quick selection

Insertion loss and pressure loss MWS-0B-... and MWS-LL-...100

L (mm)	S (mm)	D_e (dB/Okt)								Δp_t (Pa)							
		f_m (Hz)								V_s (m/s)							
		63	125	250	500	1000	2000	4000	8000	6	7	8	9	10	11	12	13
500	50	1	3	7	12	25	30	18	14	15	18	23	29	34	41	49	57
	60	1	2	6	11	23	27	16	13	13	15	19	24	29	36	41	48
	70	0	2	5	10	22	25	14	11	11	13	17	21	25	31	36	42
	80	0	1	4	9	20	22	13	10	< 10	12	15	19	23	27	32	37
	90	0	1	3	8	19	20	11	9	< 10	< 10	13	17	20	24	28	33
	100	0	1	2	7	17	18	10	7	< 10	< 10	12	15	18	22	26	30
1000	50	2	6	16	26	48	48	33	26	17	21	26	32	39	47	55	64
	60	2	5	15	24	45	45	30	24	15	17	22	27	33	40	47	55
	70	1	5	13	22	43	43	28	20	13	15	19	24	29	35	40	47
	80	1	4	12	20	40	41	26	18	11	13	17	21	26	31	36	42
	90	1	4	11	19	38	39	24	15	< 10	12	15	19	23	28	32	37
	100	1	3	9	18	36	37	22	13	< 10	11	13	17	21	25	29	34
1500	50	3	9	21	37	50	50	42	31	19	23	28	36	43	52	61	70
	60	2	8	19	34	50	50	39	27	16	19	24	30	37	44	51	60
	70	2	7	17	32	50	50	36	24	14	16	21	26	32	38	45	52
	80	2	6	16	30	50	50	34	21	12	15	18	23	28	34	39	46
	90	2	5	14	28	50	50	32	19	< 10	13	16	21	25	30	36	41
	100	1	4	13	26	49	49	30	16	< 10	12	15	19	23	28	32	38
2000	50	3	11	18	41	50	50	50	38	20	24	30	38	46	56	66	77
	60	3	10	25	38	50	50	46	34	17	20	26	32	39	47	55	53
	70	3	9	23	36	50	50	42	30	15	18	22	28	34	41	48	57
	80	2	8	20	34	50	50	39	26	13	16	20	25	30	36	42	50
	90	2	7	18	32	50	50	36	23	12	14	17	22	27	32	38	44
	100	2	7	16	31	50	50	34	20	< 10	< 10	16	20	24	29	34	40
2500	50	4	12	31	44	50	50	50	41	22	26	32	41	49	60	71	83
	60	3	13	28	42	50	50	50	37	18	22	27	35	41	51	59	67
	70	3	13	26	40	50	50	48	33	16	19	24	30	36	43	51	60
	80	3	12	23	38	50	50	45	30	14	17	21	26	32	39	45	53
	90	2	10	21	36	50	50	41	26	13	15	19	24	29	35	40	48
	100	2	8	19	34	50	50	37	23	11	13	17	22	26	32	37	43
3000	50	5	16	38	> 50	> 50	> 50	> 50	> 50	24	29	35	45	54	66	78	91
	60	4	14	34	> 50	> 50	> 50	> 50	49	20	24	30	39	45	56	65	74
	70	4	13	31	> 50	> 50	> 50	> 50	43	18	21	26	33	40	47	56	66
	80	4	11	29	> 50	> 50	> 50	> 50	38	15	19	23	29	35	43	50	58
	90	4	9	25	50	> 50	> 50	> 50	34	14	17	21	26	32	39	44	53
	100	2	7	23	47	> 50	> 50	> 50	29	12	14	19	24	29	35	41	47

MWS/MWK - Mineral wool silencers

Insertion loss and pressure loss MWS-0B-... and MWS-LB-...100

L (mm)	S (mm)	D_e (dB/Okt)								Δp_t (Pa)							
		f_m (Hz)								V_s (m/s)							
		63	125	250	500	1000	2000	4000	8000	6	7	8	9	10	11	12	13
500	50	1	4	9	13	19	19	15	13	15	18	23	29	34	41	49	57
	60	1	4	8	12	17	17	13	11	13	15	19	24	29	36	41	48
	70	1	3	7	11	16	15	12	10	11	13	17	21	25	31	36	42
	80	0	3	6	10	14	13	10	8	< 10	12	15	19	23	27	32	37
	90	0	2	6	9	13	12	9	7	< 10	< 10	13	17	20	24	28	33
	100	0	2	5	9	12	11	8	6	< 10	< 10	12	15	18	22	26	30
1000	50	2	7	19	33	45	40	24	19	17	21	26	32	39	47	55	64
	60	2	7	17	30	40	34	20	16	15	17	22	27	33	40	47	55
	70	2	6	16	28	36	30	17	14	13	15	19	24	29	35	40	47
	80	2	5	15	25	32	25	15	12	11	13	17	21	26	31	36	42
	90	1	5	14	23	28	22	13	11	< 10	12	15	19	23	28	32	37
	100	1	4	12	22	25	18	11	9	< 10	11	13	17	21	25	29	34
1500	50	3	11	27	43	50	50	31	22	19	23	28	36	43	52	61	70
	60	2	10	25	40	50	46	27	19	16	19	24	30	37	44	51	60
	70	2	9	23	37	48	40	23	17	14	16	21	26	32	38	45	52
	80	2	8	21	343	44	35	20	14	12	15	18	23	28	34	39	46
	90	2	7	19	2	40	30	17	12	< 10	13	16	21	25	30	36	41
	100	2	6	18	30	36	25	14	10	< 10	12	15	19	23	28	32	38
2000	50	4	14	34	49	50	50	38	28	20	24	30	38	46	56	66	77
	60	3	13	31	46	50	50	32	24	17	20	26	32	39	47	55	53
	70	3	12	28	43	50	48	28	20	15	18	22	28	34	41	48	57
	80	3	11	26	40	50	42	24	17	13	16	20	25	30	36	42	50
	90	2	10	24	37	48	36	20	14	12	14	17	22	27	32	38	44
	100	2	9	22	35	44	31	17	12	< 10	< 10	16	20	24	29	34	40
2500	50	5	15	38	50	50	50	45	31	22	26	32	41	49	60	71	83
	60	4	15	35	50	50	50	39	27	18	22	27	35	41	51	59	67
	70	4	14	32	47	50	50	34	24	16	19	24	30	36	43	51	60
	80	3	13	30	44	50	47	29	21	14	17	21	26	32	39	45	53
	90	3	13	28	42	50	41	25	18	13	15	19	24	29	35	40	48
	100	3	12	26	39	49	35	21	15	11	13	17	22	26	32	37	43
3000	50	5	20	49	50	50	50	50	40	24	29	35	45	54	66	78	91
	60	5	18	45	50	50	50	49	34	20	24	30	39	45	56	65	74
	70	4	16	41	50	50	50	41	31	18	21	26	33	40	47	56	66
	80	4	14	38	50	50	50	36	25	15	19	23	29	35	43	50	58
	90	4	13	34	50	50	50	31	22	14	17	21	26	32	39	44	53
	100	4	11	32	50	50	45	25	18	12	14	19	24	29	35	41	47

MWS/MWK - Mineral wool silencers

Insertion loss and pressure loss MWS-0B-... and MWS-LL-...200

L (mm)	S (mm)	D_e (dB/Okt)								Δp_t (Pa)							
		f_m (Hz)								V_s (m/s)							
		63	125	250	500	1000	2000	4000	8000	6	7	8	9	10	11	12	13
500	50	4	6	14	25	40	38	23	20	15	18	22	28	34	41	48	56
	60	3	5	12	23	36	34	21	18	14	16	20	25	31	37	43	51
	80	2	4	10	20	29	27	18	13	12	14	17	22	26	31	37	43
	100	1	3	9	18	23	21	16	10	< 10	12	15	19	23	28	32	38
	120	1	3	8	16	21	19	12	8	< 10	11	13	17	21	25	29	34
	140	1	2	7	14	18	16	9	7	< 10	10	12	15	19	23	26	31
	160	1	2	7	12	16	14	7	6	< 10	< 10	11	14	17	21	24	29
	180	1	2	6	11	15	13	7	6	< 10	< 10	11	13	16	20	23	27
	200	1	2	6	10	14	11	7	6	< 10	< 10	10	13	15	18	21	25
1000	50	5	9	19	31	46	44	29	24	18	20	26	33	39	48	55	64
	60	5	8	18	30	44	43	28	22	16	18	23	29	36	43	50	58
	80	3	8	16	30	42	42	27	18	13	16	19	25	30	37	42	49
	100	2	7	15	29	40	41	26	15	12	14	17	22	26	32	37	44
	120	2	7	14	27	36	36	21	12	< 10	12	15	19	24	29	33	39
	140	2	6	13	25	33	31	17	11	< 10	11	14	18	21	26	31	36
	160	2	5	13	23	30	27	14	9	< 10	10	13	16	20	24	28	33
	180	2	5	12	21	27	23	13	8	< 10	< 10	12	15	19	23	26	31
	200	1	4	11	19	25	20	11	7	< 10	< 10	12	14	17	21	25	29
1500	50	6	11	23	37	> 50	> 50	36	27	19	23	28	36	44	52	61	74
	60	5	11	23	37	50	50	36	25	17	20	26	33	39	47	55	64
	80	4	11	22	35	50	50	35	22	15	17	22	27	33	40	46	54
	100	3	10	22	34	49	50	34	19	13	15	19	24	29	35	41	48
	120	3	10	20	33	46	46	28	16	12	14	17	22	26	32	37	44
	140	2	9	19	32	44	42	23	13	< 10	13	15	20	24	29	34	40
	160	2	8	17	31	41	37	19	11	< 10	12	14	18	22	27	31	37
	180	2	7	16	28	38	32	16	9	< 10	11	13	17	21	25	29	34
	200	2	6	15	26	34	26	13	8	< 10	10	13	16	19	23	27	32
2000	50	7	14	28	43	> 50	> 50	43	31	21	25	31	39	47	56	67	84
	60	6	14	28	43	50	50	42	29	19	22	28	35	42	51	58	66
	80	5	14	28	42	50	50	41	26	16	18	23	30	36	43	50	58
	100	4	13	28	41	50	50	40	23	14	16	20	26	32	38	44	51
	120	4	12	26	41	50	50	34	19	13	15	18	23	29	35	40	46
	140	3	11	23	40	47	47	28	16	11	14	17	21	26	31	37	43
	160	3	10	22	39	44	42	23	13	< 10	13	15	20	24	29	34	39
	180	3	9	20	37	43	37	20	11	< 10	12	15	18	22	27	32	37
	200	3	8	19	34	42	32	16	9	< 10	11	14	17	21	25	30	35

MWS/MWK - Mineral wool silencers

Insertion loss and pressure loss MWS-0B-... and MWS-LL-...200

L (mm)	S (mm)	D_e (dB/Okt)								Δp_t (Pa)							
		f_m (Hz)								V_s (m/s)							
		63	125	250	500	1000	2000	4000	8000	6	7	8	9	10	11	12	13
2500	50	7	17	33	50	> 50	> 50	> 50	35	22	26	33	41	50	60	73	93
	60	7	17	34	50	50	50	49	32	20	23	30	37	45	54	63	73
	80	6	16	35	49	50	50	47	29	17	19	25	31	38	46	53	60
	100	5	16	36	49	50	50	46	26	15	17	22	27	33	40	47	55
	120	5	15	31	48	50	50	38	22	13	16	19	25	30	36	42	49
	140	4	13	30	48	50	50	31	18	12	14	17	23	27	33	39	46
	160	4	12	29	45	48	47	26	15	< 10	13	16	21	25	31	36	42
	180	3	12	27	42	47	43	22	13	< 10	12	15	19	23	29	33	39
	200	3	9	25	42	50	38	19	10	< 10	12	14	18	22	2750	31	37
3000	50	11	20	41	> 50	> 50	> 50	> 50	49	24	29	36	45	55	66	80	102
	60	9	20	41	> 50	> 50	> 50	> 50	45	22	25	33	41	50	59	69	80
	80	7	20	40	> 50	> 50	> 50	> 50	40	19	21	28	34	42	51	58	66
	100	5	18	40	> 50	> 50	> 50	> 50	34	17	19	24	30	36	44	52	61
	120	5	18	36	> 50	> 50	> 50	50	29	14	18	21	28	33	40	46	54
	140	4	16	31	> 50	> 50	> 50	34	20	13	15	19	25	30	36	43	51
	160	4	14	31	> 50	> 50	> 50	34	20	11	14	18	23	28	34	40	46
	180	4	13	29	50	> 50	> 50	29	16	> 10	13	17	21	25	32	36	43
	200	4	11	27	47	> 50	47	23	14	> 10	13	15	20	24	30	34	41

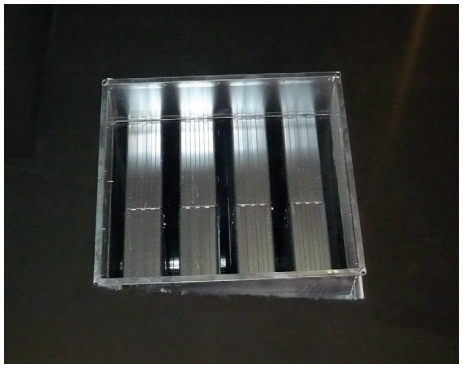

MWS/MWK - Mineral wool silencers

Insertion loss and pressure loss MWS-0B-... and MWS-LB-...200

L (mm)	S (mm)	D_e (dB/Okt)								Δp_t (Pa)							
		f_m (Hz)								V_s (m/s)							
		63	125	250	500	1000	2000	4000	8000	6	7	8	9	10	11	12	13
500	50	3	7	22	21	26	25	18	12	15	18	22	28	34	41	48	56
	60	2	6	19	18	22	21	14	10	14	16	20	25	31	37	43	51
	80	2	5	15	14	18	15	11	8	12	14	17	22	26	31	37	43
	100	2	4	13	12	16	13	9	7	< 10	12	15	19	23	28	32	38
	120	1	3	11	11	14	11	8	7	< 10	11	13	17	21	25	29	34
	140	1	3	10	9	12	9	7	6	< 10	10	12	15	19	23	26	31
	160	1	3	8	8	11	8	7	6	< 10	< 10	11	14	17	21	24	29
	180	1	4	8	8	10	8	7	5	< 10	< 10	11	13	16	20	23	27
	200	1	4	7	7	10	9	7	5	< 10	< 10	10	13	15	18	21	25
1000	50	7	17	34	35	41	43	29	23	18	20	26	33	39	48	55	64
	60	5	15	30	31	35	36	24	19	16	18	23	29	36	43	50	58
	80	4	13	26	26	30	27	18	14	13	16	19	25	30	37	42	49
	100	4	12	23	23	27	23	15	12	12	14	17	22	26	32	37	44
	120	3	11	21	20	24	19	13	11	< 10	12	15	19	24	29	33	39
	140	2	10	19	17	21	16	11	9	< 10	11	14	18	21	26	31	36
	160	2	9	17	16	19	13	10	8	< 10	10	13	16	20	24	28	33
	180	2	9	16	15	17	12	9	7	< 10	<10	12	15	19	23	26	31
	200	2	9	14	14	15	11	9	7	< 10	<10	12	14	17	21	25	29
1500	50	8	24	45	49	> 50	> 50	36	27	19	23	28	36	44	52	61	74
	60	6	22	40	43	47	44	30	23	17	20	26	33	39	47	55	64
	80	5	20	35	35	41	36	23	17	15	17	22	27	33	40	46	54
	100	4	19	32	32	38	31	19	14	13	15	19	24	29	35	41	48
	120	4	17	28	28	34	27	16	12	12	14	17	22	26	32	37	44
	140	4	16	25	24	29	22	13	11	< 10	13	15	20	24	29	34	40
	160	3	14	23	21	26	18	11	10	< 10	12	14	18	22	27	31	37
	180	3	14	21	20	24	16	11	9	< 10	11	13	17	21	25	29	34
	200	3	13	19	18	21	13	10	8	< 10	10	13	16	19	23	27	32
2000	50	10	29	49	> 50	> 50	> 50	45	33	21	25	31	39	47	56	67	84
	60	8	27	45	48	50	48	37	27	19	22	28	35	42	51	58	66
	80	6	25	40	41	48	41	28	21	16	18	23	30	36	43	50	58
	100	5	24	38	38	45	37	24	17	14	16	20	26	32	38	44	51
	120	5	22	34	33	40	32	20	15	13	15	18	23	29	35	40	46
	140	5	20	30	29	35	27	16	13	11	14	17	21	26	31	37	43
	160	4	19	27	26	31	23	14	12	< 10	13	15	20	24	29	34	39
	180	4	18	25	25	28	20	13	11	< 10	12	15	18	22	27	32	37
	200	4	17	24	24	26	17	12	10	< 10	11	14	17	21	25	30	35

MWS/MWK - Mineral wool silencers

Insertion loss and pressure loss MWS-0B-... and MWS-LB-...200

L (mm)	S (mm)	D_e (dB/Okt)								Δp_t (Pa)							
		f_m (Hz)								V_s (m/s)							
		63	125	250	500	1000	2000	4000	8000	6	7	8	9	10	11	12	13
2500	50	11	31	> 50	> 50	> 50	> 50	> 50	38	22	26	33	41	50	60	73	93
	60	9	29	50	50	50	50	43	33	20	23	30	37	45	54	63	73
	80	8	27	49	50	50	46	35	28	17	25	25	31	38	46	53	60
	100	7	26	48	48	50	42	30	25	15	22	22	27	33	40	47	55
	120	6	24	43	42	47	37	25	20	13	19	19	25	30	36	42	49
	140	6	22	38	37	41	31	20	16	12	17	17	23	27	33	39	46
	160	5	21	34	33	37	27	17	13	< 10	16	16	21	25	31	36	42
	180	5	19	32	31	34	25	16	13	< 10	15	15	19	23	29	33	39
	200	5	18	30	30	31	22	15	13	< 10	14	14	18	22	27	31	37
3000	50	14	43	> 50	> 50	> 50	> 50	> 50	49	24	29	36	45	55	66	80	102
	60	11	40	> 50	> 50	> 50	> 50	> 50	41	22	25	33	41	50	59	69	80
	80	9	36	> 50	> 50	> 50	> 50	41	31	19	21	28	34	42	51	58	66
	100	7	34	> 50	> 50	> 50	> 50	34	25	17	19	24	30	36	44	52	61
	120	7	31	50	50	> 50	49	29	22	14	18	21	28	33	40	46	54
	140	7	29	45	43	> 50	40	23	20	13	15	19	25	30	36	43	51
	160	5	25	41	38	47	32	20	18	11	14	18	23	28	34	40	46
	180	5	25	38	36	43	29	20	16	> 10	13	17	21	25	32	36	43
	200	5	23	34	32	38	23	18	14	> 10	13	15	20	24	30	34	41

MWS/MWK - Mineral wool silencers

Dimensions

Silencing baffle type MWK-...

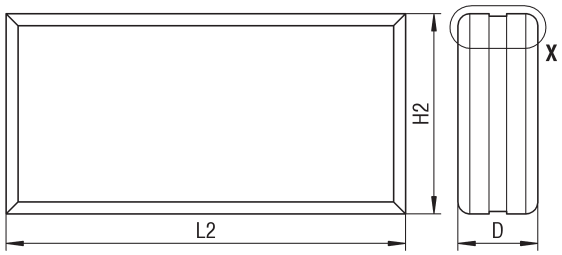

Detail X

At D = 100/200 and H2 ≥ 200

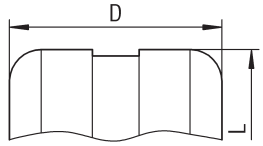

round design

For H2 < 200 and/or for D = 300

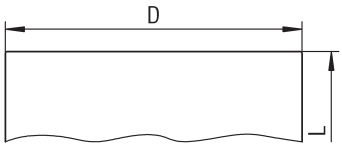

rectangular design
D = 300 is delivered with a fitted intake sheet
L1 = L2 + 50 mm

Baffle silencer type MWS-...

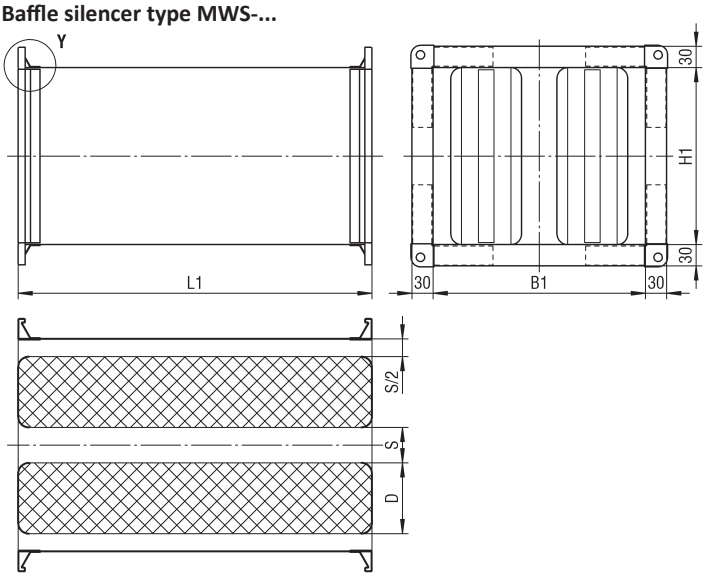

Available sizes

L1 = L2 (mm)	H1 = H2 (mm)	D = 100 S = ≥ 40, ≤ 100 B1 (mm)	D = 200 S = ≥ 50, ≤ 200 B1 (mm)	n
500 750 1000 1250 1750 2000 2250 2500 3000	250 500 750 1000 1500 1750 2000 2250 2500 2750 3000	140-200	250-400	1
		280-400	500-800	2
		420-600	750-1200	3
		6560-800	1000-1600	4
		700-1000	1250-2000	5
		840-1200	1500-2400	6
		980-1400	1750-2800	7
		1120-1600	2000-3200	8
		1260-1800	2250-3600	9
		1400-2000	2500-4000	10
		1540-2200	2750-4400	11
		1680-2400	3000-4800	12
		1820-2600	3250-5200	13
		1960-2800	3500-5600	14
		2100-3000	3750-6000	15
		2240-3200	4000-6400	16

All combined widths and heights available.

MWS/MWK - Mineral wool silencers

Division table for baffle silencer MWS
Division in width, height or length at >1500 mm

Height	Width			
	140-1500	1501-3000	3001-4500	4501-6400
150-1500	A	B	E	G
1501-3000	C	D	F	H

No.	Division			
	in width	in height	in length	Model
A	1-part	1-part	2-part When L > 1500	MWS1-B1H1
B	2-part	1-part	2-part When L > 1500	MWS2-B2H1
C	1-part	2-part	2-part When L > 1500	MWS3-B1H2
D	2-part	2-part	2-part When L > 1500	MWS4-B2H2
E	3-part	1-part	2-part When L > 1500	MWS5-B3H1
F	3-part	2-part	2-part When L > 1500	MWS6-B3H2
G	4-part	1-part	2-part When L > 1500	MWS7-B4H1
H	4-part	2-part	2-part When L > 1500	MWS8-B4H2

RS - Duct silencer

Properties

- Possible cross-section of diameter 71 mm to 710 mm, packing thickness 50-100 and 150 mm.
- Cylindrical silencers for round ducts.
- Outer casing made of galvanised steel with connection spigot.
- Insulation made of non-flammable mineral wool filling as per DIN 4102 A2.
- Certified according to ATEX Directive 2014/34/EU.

Quick selection

Pressure loss and velocity

RS-M-..., L = 950, with central baffle

NW	Δp_t (Pa)										
	v_s (m/s)										
	4	5	6	7	8	9	10	11	12	13	14
0355	15	24	32	46	60	76	91	111	131	160	189
0400	13	22	30	42	54	69	84	103	121	148	175
0450	13	21	29	40	51	65	79	97	114	140	165
0500	12	20	28	39	49	63	77	94	110	135	159
0560	12	20	27	37	47	61	74	91	107	131	155
0630	11	19	26	36	45	59	72	88	104	127	150
0710	11	18	24	33	42	56	69	85	100	123	145

Insertion loss

RS-M-...-50, L = 950, with central baffle

NW	D_e (dB/Okt)							
	f_m (Hz)							
	63	125	250	500	1000	2000	4000	8000
0350	2	5	8	17	36	34	14	6
0355	2	5	8	17	35	33	13	6
0400	2	5	7	13	30	28	10	5
0450	1	4	6	12	26	23	9	4
0500	1	3	5	10	24	21	7	4

RS - Duct silencer

RS-M-...-100, L = 950, with central baffle

NW	D_e (dB/Okt)							
	f_m (Hz)							
	63	125	250	500	1000	2000	4000	8000
0350	3	8	14	23	39	35	15	8
0355	2	8	14	23	38	34	14	8
0400	2	7	12	25	36	31	12	6
0450	2	7	11	23	34	28	10	6
0500	2	6	12	22	30	23	8	5
0560	1	5	11	20	25	20	7	4
0600	1	7	10	18	22	18	7	4
0630	1	6	9	18	19	16	6	3
0710	1	4	7	15	16	14	5	2

Pressure loss and velocity
RS-N-..., L = 950, without central baffle

NW	Δp_t (Pa)										
	v_s (m/s)										
	4	5	6	7	8	9	10	11	12	13	14
0071	4	6	9	12	15	19	23	28	32	38	43
0080	4	5	7	10	13	16	20	24	28	33	37
0090	3	5	6	9	11	14	17	20	24	28	32
0100	3	4	6	8	10	12	15	18	21	25	28
0125	2	3	4	6	7	9	11	13	16	19	21
0140	2	3	4	5	6	8	10	12	14	16	18
0150	2	2	3	5	6	7	9	11	13	15	17
0160	1	2	3	4	5	7	8	10	12	14	16
0180	1	2	3	4	5	6	7	9	10	12	14
0200	1	2	2	3	4	5	6	7	8	10	12
0225	1	2	2	3	4	4	5	6	8	9	10
0250	1	1	2	2	3	4	5	6	7	8	9
0280	1	1	2	2	3	3	4	5	6	7	8
0315	1	1	1	2	2	3	4	4	5	6	7
0355	1	1	1	2	2	3	3	4	4	5	6
0400	1	1	1	1	2	2	3	3	4	4	5
0450	1	1	1	1	2	2	2	3	3	4	4
0500	1	1	1	1	1	2	2	2	3	3	4
0560	1	1	1	1	1	1	2	2	3	3	3
0630	1	1	1	1	1	1	2	2	2	3	3
0710	1	1	1	1	1	1	1	2	2	2	3

RS - Duct silencer

Insertion loss
RS-N-...-50, L = 1950, without central baffle

NW	D_e (dB/Okt)							
	f_m (Hz)							
	63	125	250	500	1000	2000	4000	8000
0071	6	15	28	44	50	50	41	26
0080	5	14	27	42	50	50	40	24
0090	5	13	25	39	50	50	36	22
0100	5	12	23	36	50	50	34	21
0112	5	12	22	35	50	50	33	20
0125	4	11	21	33	50	50	32	19
0140	4	10	17	27	39	36	25	16
0150	3	9	16	26	37	31	22	15
0160	3	8	15	23	34	29	18	14
0180	3	7	13	20	31	26	15	13
0200	2	5	11	18	30	24	14	11
0224	2	4	10	17	29	20	12	10
0250	2	4	9	15	27	18	11	9
0280	2	3	7	13	25	15	8	7
0300	2	3	6	13	24	15	8	6
0315	1	3	6	12	24	14	7	6
0350	1	2	5	12	23	13	6	5
0355	1	2	5	11	21	11	5	5
0400	1	2	4	10	19	10	4	4

RS - Duct silencer

RS-N-...-100, L = 950, without central baffle

NW	D_e (dB/Okt)							
	f_m (Hz)							
	63	125	250	500	1000	2000	4000	8000
0071	10	23	32	49	50	50	50	41
0080	9	22	30	45	50	50	50	39
0090	8	20	29	41	50	50	50	36
0100	7	19	28	40	50	50	50	32
0112	7	18	27	38	50	50	44	27
0125	6	17	25	34	49	50	36	22
0140	6	15	22	31	45	50	33	18
0150	5	13	19	30	44	50	28	16
0160	5	12	18	28	41	48	26	16
0180	4	11	16	25	37	43	23	14
0200	4	10	15	24	35	41	22	13
0224	3	9	14	22	33	38	21	12
0250	3	8	13	20	31	35	20	11
0280	3	6	10	17	29	32	18	9
0300	3	6	9	16	27	29	16	8
0315	2	6	8	15	26	27	14	8
0350	2	5	7	13	25	24	12	7
0355	2	5	7	12	24	21	11	7
0400	2	4	6	11	23	20	10	6
0450	1	4	5	10	19	18	9	5
0500	1	3	4	9	17	12	6	4

Flow generated noise

v_s (m/s)	L_W (dB/Okt)								L_{WA} [dB(A)]
	f_m (Hz)								
	63	125	250	500	1000	2000	4000	8000	
5	37	34	30	26	21				28
6	42	39	35	31	26	21			33
8	48	46	43	39	35	29	23		41
10	53	52	49	45	41	36	30	24	47
12	58	56	54	50	46	41	36	29	52
14	62	61	58	55	51	46	41	35	55

The flow noise must be 7 to 10 dB lower in each octave band than the reduced noise behind the silencer.

Correction factor for RS-N-...

NW	0100	0112	0125	0140	0160	0180	0200	0225	0250	0280	0315	0355	0400	0450	0500	0560	0630	0710
K_f (dB)	-8	-7	-6	-5	-4	-3	-2	-1	0	+1	+2	+3	+4	+5	+6	+7	+8	+9

RS - Duct silencer

NW	0900	1000	1120	1250
K_f (dB)	+10	+11	+12	+12

Correction factor for RS-M-...

NW	0355	0400	0450	0500	0560	0630	0710
K_f (dB)	+2	+3	+4	+5	+6	+7	+8

Dimensions

RS-M-...

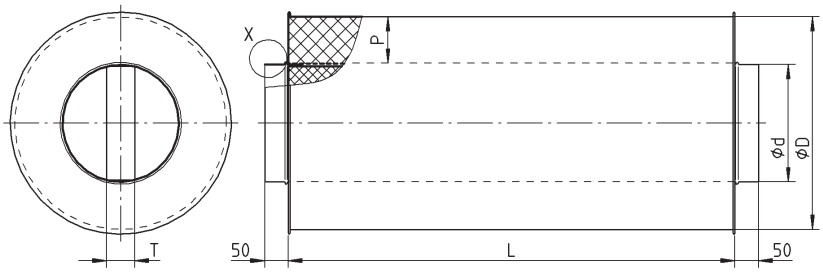

Available sizes -RS-M...

NW	Ød	ØD P (mm) 50	ØD P (mm) 100	ØD P (mm) 150	T (mm)
0350	348	450	550	650	60
0355	353	455	555	655	60
0400	398	500	600	700	60
0450	448	550	650	750	60
0500	198	600	700	800	75
0560	558	-	760	860	100
0600	598	-	800	900	100
0630	628	-	830	930	100
0710	708	-	910	1010	150

P = packing thickness
T = baffle width
- = special model, only upon request

Packing thickness RS-M-...

NW	L = 950 P (mm) 50	L = 950 P (mm) 100	L = 950 P (mm) 150	L = 1450 P (mm) 50	L = 1450 P (mm) 100	L = 1450 P (mm) 150	L = 1950 P (mm) 50	L = 1950 P (mm) 100	L = 1950 P (mm) 150
0350	x	x	x	x	x	x	-	-	x
0355	x	x	x	x	x	x	-	-	x
0400	x	x	x	x	x	x	-	-	x
0450	x	x	x	x	x	x	-	-	x
0500	x	x	x	x	x	x	-	-	x
0560	-	x	x	-	x	x	-	-	x
0600	-	x	x	-	x	x	-	-	x
0630	-	x	x	-	x	x	-	-	x
0710	-	x	x	-	x	x	-	-	x

RS - Duct silencer

Dimensions

RS-N-...

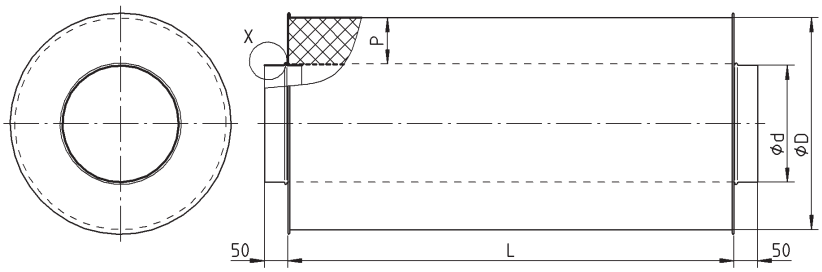

Available sizes -RS-N...

NW	Ød	ØD P (mm)		
		50	100	150
0071	69	175	275	-
0080	78	180	280	-
0090	88	190	290	-
0100	98	200	300	-
0112	110	212	312	-
0125	123	225	325	-
0140	138	240	340	-
0150	148	250	350	-
0160	158	260	360	-
0180	178	280	380	-
0200	198	300	400	-
0224	222	325	425	-
0250	248	350	450	-
0280	278	380	480	580
0300	298	400	500	600
0015	313	415	515	615
0350	348	450	550	650
0355	353	455	555	655
0400	398	500	600	700
0450	448	-	650	750
0500	498	-	700	800
0560	558	-	760	860
0600	598	-	800	900
0630	628	-	830	930
0710	708	-	910	1010

P = packing thickness, - = special model, only upon request

Packing thickness RS-N-...

NW	L = 950 P (mm)			L = 1450 P (mm)			L = 1950 P (mm)			L = 1950 P (mm)		
	50	100	150	50	100	150	50	100	150	50	100	150
0071	x	x	-	x	x	-	x	-	-	x	-	-
0080	x	x	-	x	x	-	x	-	-	x	-	-
0090	x	x	-	x	x	-	x	-	-	x	-	-
0100	x	x	-	x	x	-	x	-	-	x	-	-
0112	x	x	-	x	x	-	x	-	-	x	-	-
0125	x	x	-	x	x	-	x	-	-	x	-	-
0140	x	x	-	x	x	-	x	-	-	x	-	-
0150	x	x	-	x	x	-	x	x	-	-	x	-
0160	x	x	-	x	x	-	x	x	-	-	x	-
0180	x	x	-	x	x	-	x	x	-	-	x	-
0200	x	x	-	x	x	-	x	x	-	-	x	-
0224	x	x	-	x	x	-	x	x	-	-	x	-
0250	x	x	-	x	x	-	x	x	-	-	x	-
0280	x	x	-	x	x	x	x	x	x	-	x	x
0300	x	x	-	x	x	x	x	x	x	-	x	x
0315	x	x	-	x	x	x	x	x	x	-	x	x
0350	x	x	-	x	x	x	x	x	x	-	x	x
0355	x	x	-	x	x	x	x	x	x	-	x	x
0400	x	x	-	x	x	x	x	x	x	-	x	x
0450	-	-	-	-	x	x	-	x	x	-	x	x
0500	-	-	-	-	x	x	-	x	x	-	x	x
0560	-	-	-	-	-	x	-	x	x	-	x	x
0600	-	-	-	-	-	x	-	x	x	-	x	x
0630	-	-	-	-	-	x	-	x	x	-	x	x
0710	-	-	-	-	-	x	-	x	x	-	x	x

RS-F - Flexible duct silencer

Properties

- Flexible, round silencer for connecting to round ducts.
- Outer duct made of aluminium, 2 layers.
- Perforated inner duct.
- Resin-bonded insulation materials made of glass wool, with a reinforced, abrasion-resistant side facing the inside of the duct.
- Galvanised end caps with round connection sleeve.
- Non-flammable according to DIN 4102, construction material class A1.

Quick selection

Insertion loss

RS-F-...-25, L = 1000

NW	D_e (dB/Okt)							
	f_m (Hz)							
	63	125	250	500	1000	2000	4000	8000
80	3	5	10	21	44	45	27	23
100	2	3	8	17	44	35	28	21
125	2	3	7	17	43	30	24	18
140	2	2	6	16	41	29	22	18
150	1	2	5	4	40	28	21	17
160	1	1	4	12	40	27	20	17
180	1	1	3	12	38	25	18	15
200	1	1	3	11	35	22	16	13
224	1	1	3	11	33	21	15	11
250	1	1	3	11	30	19	13	10
280	0	1	3	10	25	16	13	9
315	0	1	3	9	21	10	12	8
355	0	1	3	9	19	9	10	7
400	0	1	3	8	16	8	8	7

RS-F - Flexible duct silencer

RS-F-...-25, L = 1500

NW	D_e (dB/Okt)							
	f_m (Hz)							
	63	125	250	500	1000	2000	4000	8000
80	3	5	13	28	47	48	44	31
100	2	4	12	24	45	42	34	25
125	2	3	10	22	45	34	28	20
140	2	3	8	20	44	33	27	20
150	2	2	4	18	43	32	26	19
160	2	2	6	16	42	30	25	19
180	2	2	5	15	41	29	22	17
200	2	2	5	15	41	27	19	15
224	1	2	5	15	40	26	17	13
250	1	2	5	15	38	25	14	11
280	1	2	4	14	33	22	14	10
315	1	2	4	12	27	19	13	10
355	1	1	4	11	25	18	12	9
400	1	1	4	10	23	17	11	8

RS-F-...-50, L = 1000

NW	D_e (dB/Okt)							
	f_m (Hz)							
	63	125	250	500	1000	2000	4000	8000
80	8	14	23	45	50	50	42	27
100	7	10	21	37	50	50	29	23
125	5	7	16	32	50	42	25	22
140	5	6	14	31	49	37	23	20
150	4	5	13	30	48	36	22	18
160	4	5	12	29	47	34	20	16
180	3	5	12	27	46	30	18	15
200	3	5	11	25	45	25	16	13
224	2	5	10	24	43	22	14	12
250	2	4	9	24	40	19	12	10
280	1	4	9	23	34	16	12	9
315	1	4	8	22	28	13	12	8
355	0	4	8	20	25	12	11	8
400	0	4	8	18	23	11	10	7

RS-F - Flexible duct silencer

RS-F-...-50, L = 1500

NW	D_e (dB/Okt)							
	f_m (Hz)							
	63	125	250	500	1000	2000	4000	8000
80	11	14	33	48	50	50	47	37
100	10	11	27	44	50	50	38	30
125	7	9	21	41	50	46	33	27
140	6	8	19	40	50	45	29	24
150	5	8	18	40	50	43	27	22
160	5	7	17	39	50	42	24	19
180	4	7	15	38	49	38	21	17
200	4	6	14	37	48	34	18	15
224	3	6	16	36	46	30	17	13
250	3	5	12	35	45	25	15	12
280	2	5	11	31	40	22	14	11
315	2	4	10	26	35	19	12	10
355	2	4	10	23	30	18	11	9
400	2	4	9	20	25	17	11	8

Dimensions

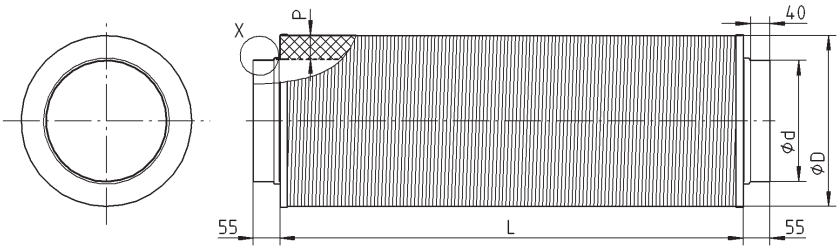

Available sizes

DN	Ød	ØD P (mm)	
		25	50
80	78	130	180
100	98	150	200
125	123	175	225
140	138	190	240
150	148	200	250
160	158	210	260
180	178	230	280
200	198	250	300
224	222	274	324
250	248	300	350
280	278	330	380
315	313	365	415
355	353	405	455
400	398	450	500

L
500
1000
1500
2000

All lengths and diameters can be combined.

AUDIX-ÜSG - Overflow box

Properties

- With integrated silencer to be built into lightweight walls as overflow unit for effectively preventing cross-talk sound transmission through the wall.
- Acoustic insulating panels of building material class B1 (slightly flammable to DIN 4102, standard) or building material class A2 (non-flammable to DIN 4102).
- Cover grille available with FQ = 43 %, 46 % and 70 %.

Quick selection

Standardised sound level difference $D_{n,e}$ for type AUDIX-ÜSG-LG

according to DIN EN ISO 10140-2 (measurement of sound insulation of components on a test bench, air sound insulation)

Frequency f (Hz)	AUDIX-ÜSG-LG L = 500 H = 350	AUDIX-ÜSG-LG L = 500 H = 450	AUDIX-ÜSG-LG L = 1000 H = 350	AUDIX-ÜSG-LG L = 1000 H = 450
	Third-octave band $D_{n,e}$ (dB)	Third-octave band $D_{n,e}$ (dB)	Third-octave band $D_{n,e}$ (dB)	Third-octave band $D_{n,e}$ (dB)
50	34	34	32	28
53	33	35	28	29
80	37	38	31	34
100	32	34	33	32
125	33	35	30	29
160	34	36	28	29
200	42	42	25	32
250	42	42	32	40
315	42	43	40	40
400	34	36	41	33
500	36	39	41	37
630	42	43	41	41
800	46	47	41	42
1000	44	46	40	48
1250	48	51	45	50
1600	52	53	50	52
2000	53	56	52	50
2500	58	59	52	53
3150	62	63	58	61
4000	64	64	66	67
5000	67	66	66	67

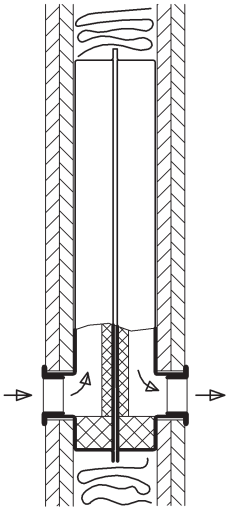

Normalised sound level difference $D_{n,g}$ (single-digit value)

according to DIN EN ISO 717-1 (weighting of sound insulation in buildings and of components – air sound insulation)

	AUDIX-ÜSG-LG L = 500 H = 350	AUDIX-ÜSG-LG L = 500 H = 450	AUDIX-ÜSG-LG L = 1000 H = 350	AUDIX-ÜSG-LG L = 1000 H = 450
$D_{n,e,w}$ (dB)	45	47	43	44

AUDIX-ÜSG - Overflow box

Standardised sound level difference $D_{n,e}$ for type AUDIX-ÜSG-LV
according to DIN EN ISO 10140-2 (measurement of sound insulation of components on a test bench, air sound insulation)

Frequency f (Hz)	AUDIX-ÜSG-LV L = 500 H = 350	AUDIX-ÜSG-LV L = 500 H = 450	AUDIX-ÜSG-LV L = 1000 H = 350	AUDIX-ÜSG-LV L = 1000 H = 450
	Third-octave band $D_{n,e}$ (dB)	Third-octave band $D_{n,e}$ (dB)	Third-octave band $D_{n,e}$ (dB)	Third-octave band $D_{n,e}$ (dB)
50	35	36	31	34
53	26	29	26	35
80	28	32	32	40
100	34	37	36	34
125	33	36	29	34
160	32	35	34	36
200	32	33	32	28
250	26	28	26	23
315	31	31	26	26
400	29	31	26	27
500	28	30	28	28
630	33	33	29	30
800	36	38	36	36
1000	42	44	42	43
1250	51	54	50	51
1600	61	62	53	57
2000	62	63	53	55
2500	59	59	51	55
3150	61	63	54	59
4000	66	67	57	61
5000	66	69	58	62

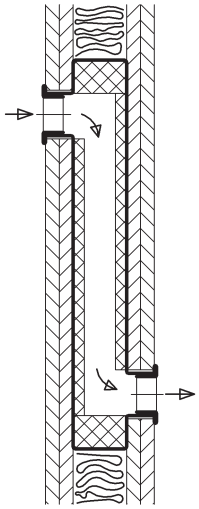

Normalised sound level difference $D_{n,g}$ (single-digit value)
according to DIN EN ISO 717-1 (Weighting of sound insulation in buildings and of components – air sound insulation)

	AUDIX-ÜSG-LV L = 500 H = 350	AUDIX-ÜSG-LV L = 500 H = 450	AUDIX-ÜSG-LV L = 1000 H = 350	AUDIX-ÜSG-LV L = 1000 H = 450
$D_{n,e,w}$ (dB)	37	39	35	35

AUDIX-ÜSG - Overflow box

Dimensions

Overflow elements variant 1: overflow element with openings at same height:
V = 30 m³/h -> 5 Pa; v_{face} ~ 0.5 m/s **AUDIX-ÜSG-LG-AB70, H = 350/450 mm, L = 500 mm**
V = 44 m³/h -> 11 Pa, v_{face} ~ 0.8 m/s **AUDIX-ÜSG-LG-AB70, H = 350/450 mm, L = 500 mm**
V = 60 m³/h -> 5 Pa; v_{face} ~ 0.5 m/s **AUDIX-ÜSG-LG-AB70, H = 350/450 mm, L = 1000 mm**
V = 90 m³/h -> 11 Pa; v_{face} ~ 0.8 m/s **AUDIX-ÜSG-LG-AB70, H = 350/450 mm, L =1000 mm**

AUDIX-ÜSG-LG

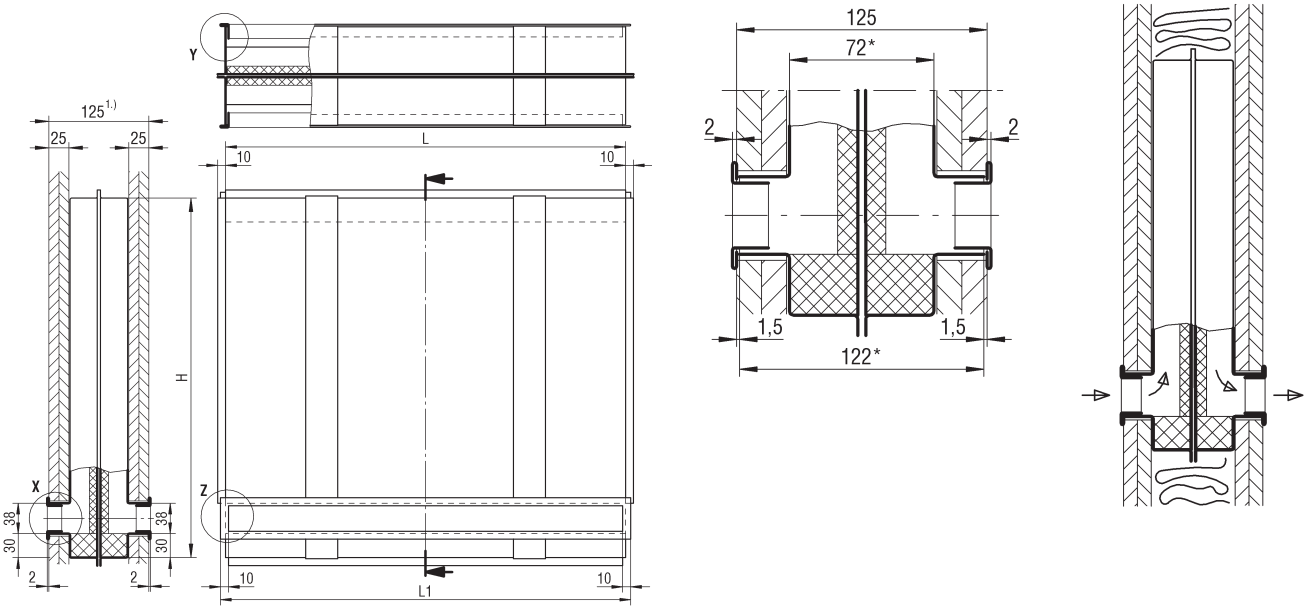

Box neck extension (-KHV)
AUDIX-ÜSG-LG-KHV

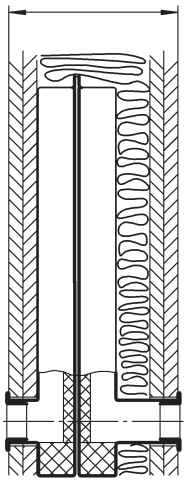

Box neck extension available for wall thicknesses > 125 mm.

AUDIX-ÜSG-LG-AB70
Cover grille on one side FQ = 70 % and cover frame on one side

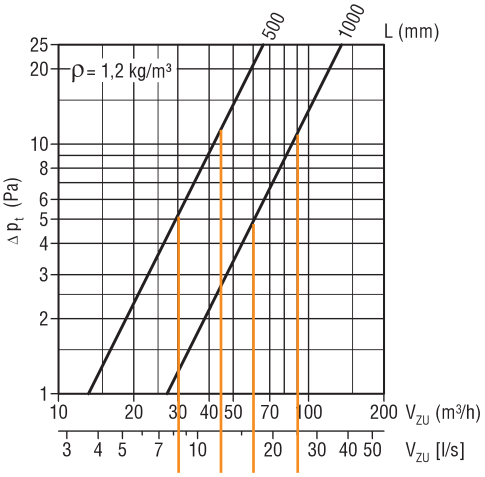

AUDIX-ÜSG - Overflow box

Overflow element variant 2: overflow element with offset openings: AUDIX-ÜSG-LV-AB70, H = 350/450 mm, L = 500 mm
V = 60 m³/h -> ~ 3 Pa; v_{face}~ 0.9 m/s
V = 90 m³/h -> 6 Pa; v_{face}~ 1.4 m/s
From 100 m³/h: overflow element with offset openings: AUDIX-ÜSG-LV-AB 70, H = 350/450 mm, L = 1000 mm
V = 120 m³/h -> 3 Pa; v_{face}~ 0.9 m/s
Up to V = 200 m³/h -> 9 Pa; v_{face}~ 1.5 m/s, more than 200 m³/h is not recommended for such a box.

AUDIX-ÜSG-LV

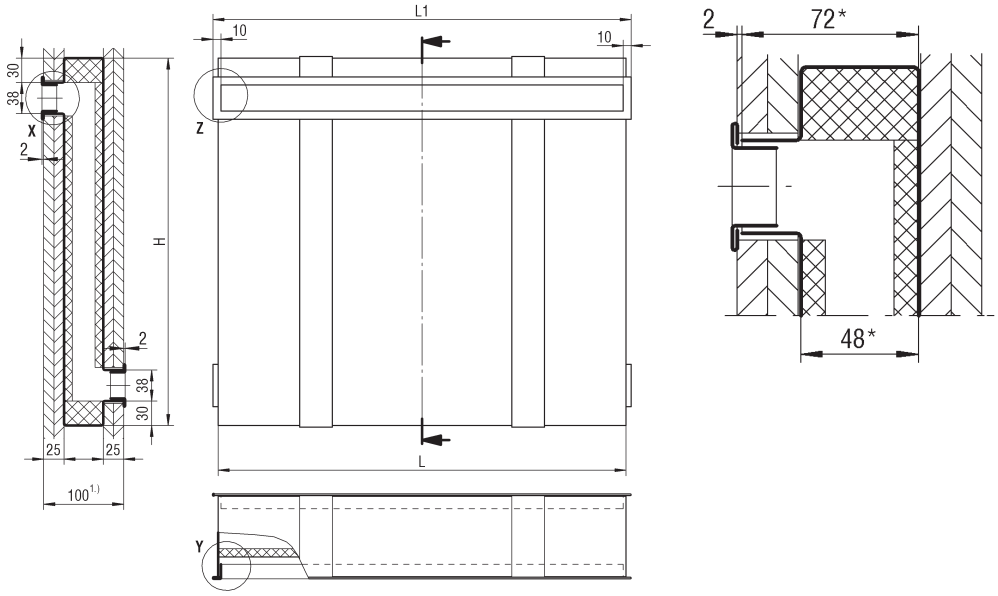

* Dimension for overflow box **structure-borne noise insulation

Box neck extension (-KHV)
AUDIX-ÜSG-LV-KHV

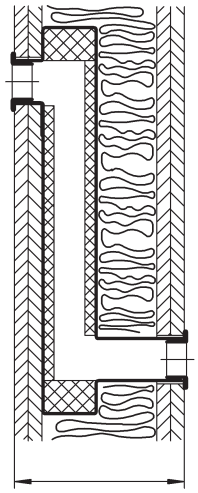

Box neck extension available for wall thicknesses > 100 mm.

AUDIX-ÜSG-LV /-AB70
Cover frame on both sides
Cover grille on one side FQ = 70 % and cover frame on one side

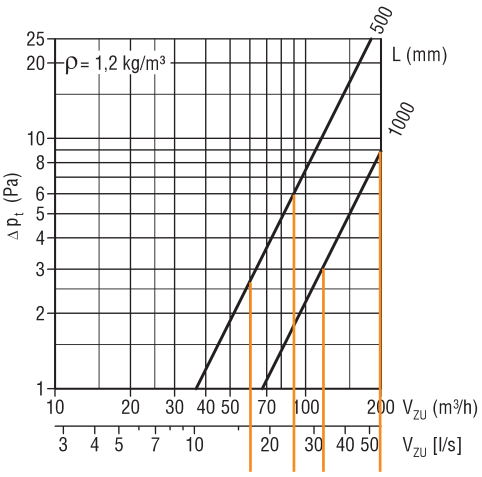

Available sizes

H	L	L1
350	500	513
450	1000	1013

All combined lengths and heights available.

AUDIX - Cross-talk sound attenuator box

Properties

- Acoustic insulating panels of building material class B1 (standard, slightly flammable as per DIN 4102-1) and B/C (slightly flammable as per DIN 13501-1) or building material class A2 (non-flammable as per DIN 4102-1) and A2-s1, d0 (non-flammable as per EN 13501-1).
- Meet the hygiene requirements according to VDI 6022-1.
- Between 50-150 m^3/h depending on the diffuser.
- Diffusers ADSA, ADSC, ADSX, ADSXW can be integrated.
- For supply air, return air and as a supply air/return air combination.

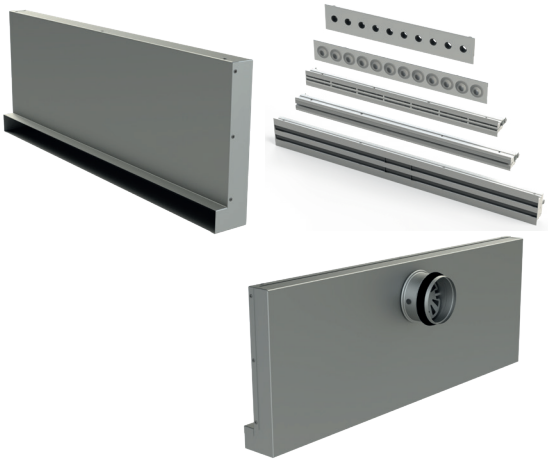

Quick selection

Model	Type of air	Length	V_{Sup} (m^3/h)	V_{Sup} [l/s]	L_{WA} [dB(A)]	Δp_t (Pa)
AUDIX-...-62 with ADSC-1	ZL	508	62	17.2	30	23
AUDIX-...-62 with ADSC-1	ZL	508	76	21.1	35	35
AUDIX-...-62 with ADSC-1	AL	508	95	26.4	30	24
AUDIX-...-62 with ADSC-1	AL	508	113	31.4	35	34
AUDIX-...-62 with ADSC-1	Z/A	508	34	9.4	30	27/12
AUDIX-...-62 with ADSC-1	Z/A	508	42	11.7	35	41/18
AUDIX-...-62 with ADSC-1	ZL	1008	110	30.6	30	18
AUDIX-...-62 with ADSC-1	ZL	1008	135	37.5	35	27
AUDIX-...-62 with ADSC-1	AL	1008	171	47.5	30	20
AUDIX-...-62 with ADSC-1	AL	1008	204	56.7	35	27
AUDIX-...-62 with ADSC-1	Z/A	1008	61	16.9	30	22/10
AUDIX-...-62 with ADSC-1	Z/A	1008	74	20.6	35	32/15
AUDIX-...-63 with ADSC-2	ZL	508	98	27.2	30	26
AUDIX-...-63 with ADSC-2	ZL	508	119	33.1	35	41
AUDIX-...-63 with ADSC-2	AL	508	122	33.9	30	24
AUDIX-...-63 with ADSC-2	AL	508	148	41.1	35	36
AUDIX-...-63 with ADSC-2	Z/A	508	52	14.4	30	30/17
AUDIX-...-63 with ADSC-2	Z/A	508	63	17.5	35	43/26
AUDIX-...-63 with ADSC-2	ZL	1008	175	48.6	30	22
AUDIX-...-63 with ADSC-2	ZL	1008	210	58.3	35	31
AUDIX-...-63 with ADSC-2	AL	1008	215	59.7	30	19
AUDIX-...-63 with ADSC-2	AL	1008	255	70.8	35	37
AUDIX-...-63 with ADSC-2	Z/A	1008	92	25.6	30	24/14
AUDIX-...-63 with ADSC-2	Z/A	1008	111	30.8	35	34/20

AUDIX - Cross-talk sound attenuator box

Model	Type of air	Length	V_{Sup} (m^3/h)	V_{Sup} [l/s]	L_{WA} [dB(A)]	Δp_t (Pa)
AUDIX-...-68 with DSXW-1	ZL	508	64	17.8	30	29
AUDIX-...-68 with DSXW-1	ZL	508	76	21.1	35	41
AUDIX-...-68 with DSXW-1	AL	508	62	17.2	30	25
AUDIX-...-68 with DSXW-1	AL	508	75	20.8	35	36
AUDIX-...-68 with DSXW-1	Z/A	508	31	8.6	30	27/25
AUDIX-...-68 with DSXW-1	Z/A	508	37	10.3	35	38/35
AUDIX-...-68 with DSXW-1	ZL	1008	114	31.7	30	23
AUDIX-...-68 with DSXW-1	ZL	1008	136	37.8	35	33
AUDIX-...-68 with DSXW-1	AL	1008	110	30.6	30	20
AUDIX-...-68 with DSXW-1	AL	1008	133	36.9	35	29
AUDIX-...-68 with DSXW-1	Z/A	1008	55	15.3	30	22/20
AUDIX-...-68 with DSXW-1	Z/A	1008	66	18.3	35	31/28
AUDIX-...-69 with DSXW-2	ZL	508	92	25.6	30	26
AUDIX-...-69 with DSXW-2	ZL	508	110	30.6	35	37
AUDIX-...-69 with DSXW-2	AL	508	106	29.4	30	27
AUDIX-...-69 with DSXW-2	AL	508	127	35.3	35	39
AUDIX-...-69 with DSXW-2	Z/A	508	48	13.3	30	28/22
AUDIX-...-69 with DSXW-2	Z/A	508	57	15.8	35	40/32
AUDIX-...-69 with DSXW-2	ZL	1008	165	45.8	30	21
AUDIX-...-69 with DSXW-2	ZL	1008	197	54.7	35	30
AUDIX-...-69 with DSXW-2	AL	1008	189	52.5	30	22
AUDIX-...-69 with DSXW-2	AL	1008	226	62.8	35	32
AUDIX-...-69 with DSXW-2	Z/A	1008	85	23.6	30	22/18
AUDIX-...-69 with DSXW-2	Z/A	1008	102	28.3	35	32/26

Sound reduction index (weighted, R_W)
according to DIN 4109 (soundproofing in building engineering, requirements and certificates)

	AUDIX-...			
	L = 508		L = 1008	
	H = 250	H = 300	H = 250	H = 300
R_W (dB)	36	38	36	38
A (m^2)	0.125	0.150	0.250	0.300

Transmission loss value D_{df} (dB)

L (mm)	H (mm)	D_{df} (dB)							
		f_m (Hz)							
		63	125	250	500	1000	2000	4000	8000
508	**250**	38	35	27	35	38	42	42	39
	300	34	34	26	29	33	42	51	44
1008	**250**	37	36	30	26	37	42	40	38
	300	36	36	32	27	38	41	46	42

AUDIX - Cross-talk sound attenuator box

Normalised sound level difference, $D_{n,e}$ for type AUDIX®
according to DIN EN ISO 10140-2 (measurement of sound insulation of components on a test bench, air sound insulation).

Frequency f (Hz)	AUDIX-...			
	L = 508		L = 1008	
	H = 250	H = 300	H = 250	H = 300
50	34	35	35	33
63	33	32	34	33
80	40	39	41	40
100	52	46	49	47
125	50	54	51	53
160	45	46	46	47
200	42	45	41	43
250	42	45	42	44
315	40	41	41	43
400	44	45	42	42
500	53	53	45	46
630	57	59	51	52
800	61	64	57	59
1000	62	63	60	60
1250	60	61	58	58
1600	61	61	57	58
2000	60	62	57	59
2500	67	68	64	66
3150	73	74	70	71
4000	70	76	69	73
5000	68	75	67	74
	Third-octave band $D_{n,e}$ (dB)			

Normalised sound level difference $D_{n,e,w}$ (single-digit value)
according to DIN EN ISO 717-1 (weighting of sound insulation in buildings and of components – air sound insulation).

	AUDIX-...			
	L = 508		L = 1008	
	H = 250	H = 300	H = 250	H = 300
$D_{n,e,w}$ (dB)	55	57	52	54

AUDIX - Cross-talk sound attenuator box

Dimensions

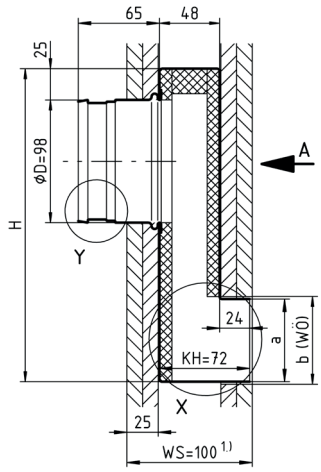

1.) For wall thickness (WS) > 100 mm up to max. 350 mm, a box neck extension (KVS) is required.

Available sizes

	Diffuser	a inside	b (wö)
AUDIX-...-55	ADSA-D0-...-1 (1-row)	66	70
AUDIX-...-61	DSA-VD-...-1 (1-row)	52	56
AUDIX-...-62	ADSC-1 (1-slot)	54	58
AUDIX-...-63	ADSC-2 (2-slot)	94	98
AUDIX-...-64	ADSX-1 (1-slot)	24	28
AUDIX-...-65	ADSX-2 (2-slot)	38	42
AUDIX-...-66	ADSX-3 (3-slot)	52	56
AUDIX-...-67	ADSX-4 (4-slot)	66	70
AUDIX-...-68	ADSXW-1 (1-slot)	42	46
AUDIX-...-69	ADSXW-2 (2-slot)	74	78

H	L	Number of connection spigots		
		AUDIX-...-Z0	AUDIX-...-A0	AUDIX-...-ZA
250 300	**0408**	1	1	2
	0508	1	1	2
	0608	1	1	2
	0808	1	1	2
	1008	2	2	2
	1208	2	2	2

All combined heights and lengths available.
Special height from ≥ 250 mm to 350 mm possible.
Special length from ≥ 408 mm up to max. 1208 mm possible.

KVS = standard box neck
WS = wall thickness
WÖ = wall opening
Wall opening in the length: L + 5

AUDIX - Cross-talk sound attenuator box

Spigot position / spigot number with air throw -Z0 / -A0 / -ZA

with 1 spigot

For supply or return air (-Z0 or -A0) length ≥ 408 to < 1008

View A

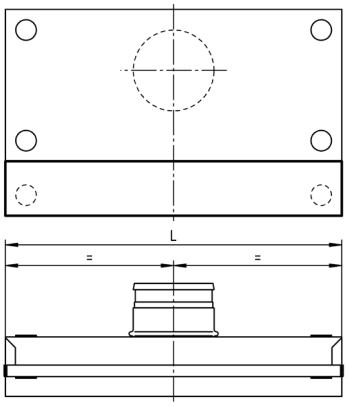

with 2 spigot

For supply or return air (-Z0 or -A0) length ≥ 1008 to < 1208

View A

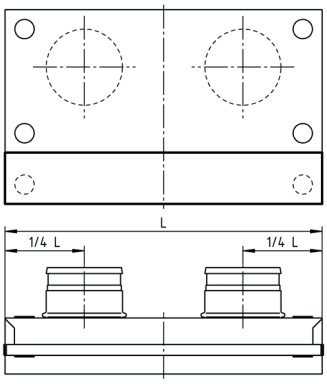

with 1 connection spigot each for supply and return air

For supply or return air (-ZA) length ≥ 408 to < 1208

View A

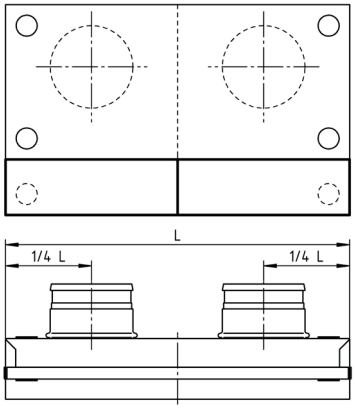

BSK-RPR - Fire damper, round

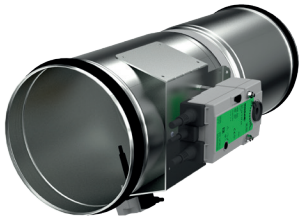

Properties

- Round design.
- For automatic closure of fire sections.
- Connection of a smoke release device with abZ (e.g. SCHAKO smoke detection system RMS) in combination with suitable release devices (e.g. spring return actuator) also possible.
- Depending on the installation situation, classification according to EN 13501-3 is EI 30 (v_e i ↔ o) S to EI 90 (v_e, h_o i ↔ o) S.
- Housing leakage class C according to EN 1751.
- Integration is possible into the building management system via the SCHAKO EasyBus signalling and switching bus system or the SCHAKO BKSYS fire damper mini-controller.
- Certified according to ATEX Directive 2014/34/EU.

Quick selection

NW	35 dB(A)				40 dB(A)				45 dB(A)			
	V (m^3/h)	V [l/s]	Δp_t (Pa)	Vk (m/s)	V (m^3/h)	V [l/s]	Δp_t (Pa)	Vk (m/s)	V (m^3/h)	V [l/s]	Δp_t (Pa)	Vk (m/s)
100	145	40	26	5.5	175	49	38	6.6	210	58	55	7.9
125	225	63	22	5.3	280	78	34	6.7	341	95	51	8.1
140	295	82	17	5.6	355	99	25	6.7	430	119	36	8.1
160	403	112	13	5.8	475	132	17	6.8	560	156	24	8.0
180	510	142	11	5.8	593	165	15	6.7	690	192	21	7.8
200	625	174	10	5.7	720	200	14	6.6	830	231	18	7.6
224	875	243	8	6.3	1020	283	12	7.4	1190	331	17	8.6
250	970	269	5	5.6	1115	310	7	6.5	1280	356	9	7.4
280	1320	367	7	6.1	1560	433	10	7.2	1836	510	14	8.5
315	1770	492	7	6.4	2135	593	10	7.8	2582	717	15	9.4
355	2220	617	8	6.3	2640	733	11	7.5	3140	872	15	9.0
400	2820	783	12	6.3	3350	931	18	7.5	3975	1104	25	8.9
450	3291	914	10	5.8	3910	1086	14	6.9	4650	1292	19	8.2
500	3942	1095	8	5.6	4670	1297	11	6.7	5535	1538	16	7.9

BSK-RPR - Fire damper, round

Weight table [kg]

BSK-RPR-S

NW	ØD (mm)	L = 455				L = 580			
		Manual release		Spring return actuator		Manual release		Spring return actuator	
100	98	2.44	6.73[1)]	3.89	8.18[1)]	2.74	7.03[1)]	4.19	8.48[1)]
125	123	2.83	7.69[1)]	4.28	9.14[1)]	3.21	8.07[1)]	4.66	9.52[1)]
140	138	3.06	8.27[1)]	4.51	9.72[1)]	3.49	8.70[1)]	4.94	10.15[1)]
160	158	3.35	9.02[1)]	4.80	10.47[1)]	3.84	9.51[1)]	5.29	10.96[1)]
180	178	3.65	9.79[1)]	5.10	11.24[1)]	4.20	10.34[1)]	5.65	11.79[1)]
200	198	3.97	10.59[1)]	5.42	12.04[1)]	4.595	11.21[1)]	6.04	12.66[1)]
224	222	4.37	11.58[1)]	5.82	13.03[1)]	5.07	12.28[1)]	6.52	13.73[1)]
250	248	4.80	12.62[1)]	6.25	14.07[1)]	5.58	13.40[1)]	7.03	14.85[1)]
280	278	6.31	16.55[1)]	7.79	18.03[1)]	7.17	17.41[1)]	8.56	18.89[1)]
315	313	7.14	18.40[1)]	8.62	19.88[1)]	8.13	19.39[1)]	9.61	20.87[1)]
355	353	8.08	20.53[1)]	9.56	22.01[1)]	9.19	21.64[1)]	10.67	23.12[1)]
400	398	9.09	22.89[1)]	10.57	24.37[1)]	10.34	24.14[1)]	11.82	25.62[1)]
450	448	10.50	25.84[1)]	11.98	27.32[1)]	11.91	27.25[1)]	13.39	28.73[1)]
500	498	11.85	28.75[1)]	13.33	30.23[1)]	13.42	30.32[1)]	14.90	31.80[1)]

[1)] approx. weight with additional mounting frame AR

BSK-RPR-F

NW	ØD (mm)	L = 375		L = 500	
		Manual release	Spring return actuator	Manual release	Spring return actuator
100	98	2.49	3.94	2.80	4.25
125	123	2.89	4.34	3.29	4.74
140	138	3.13	4.58	3.57	5.02
160	158	3.43	4.88	3.93	5.38
180	178	3.74	5.19	4.31	5.76
200	198	4.07	5.52	4.770	6.15
224	222	4.48	5.93	5.19	6.64
250	248	4.93	6.38	5.71	7.16
280	278	6.45	7.93	7.33	8.81
315	313	7.30	8.78	8.29	9.77
355	353	8.26	9.74	9.37	10.85
400	398	9.29	10.77	10.55	12.03
450	448	10.73	12.21	12.14	13.62
500	498	12.10	13.58	13.67	15.15

BSK-RPR - Fire damper, round

Dimensions

Nominal sizes 100 to ≤ 250 mm

BSK-RPR-S (plug-in connection)

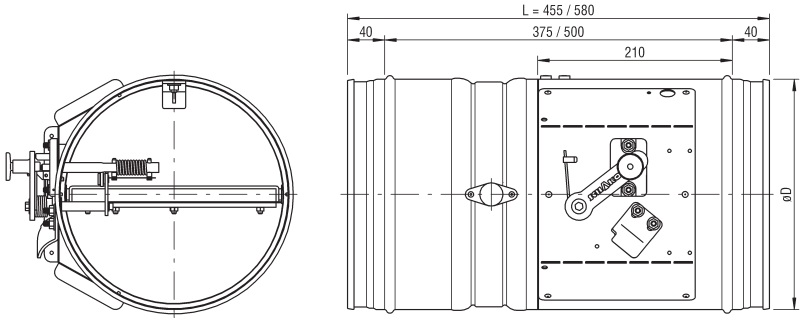

BSK-RPR-S with mounting frame AR

(mounting frame AR only possible in -S design, pre-mounted ex works, delivery in loose form not possible)

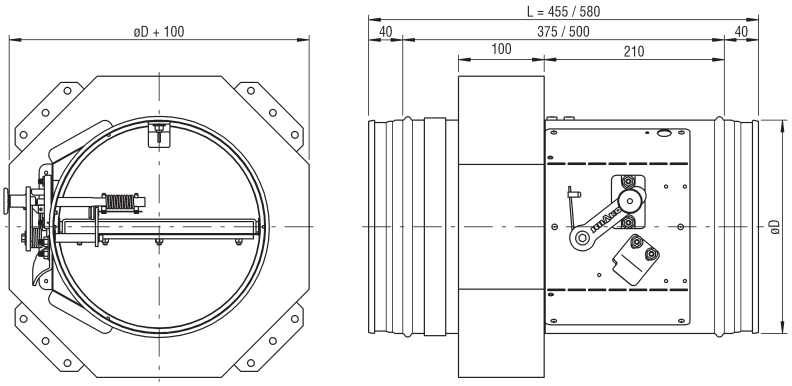

BSK-RPR-F (flanged connection)

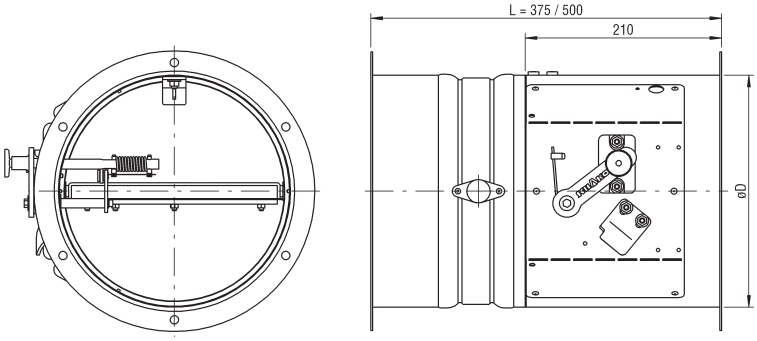

BSK-RPR - Fire damper, round

Nominal sizes > 250 to 500 mm
BSK-RPR-S (plug-in connection)

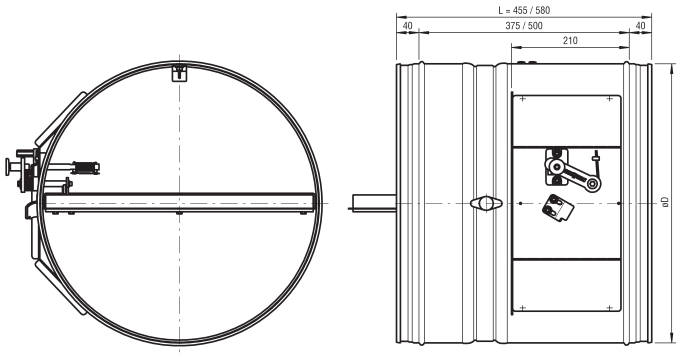

BSK-RPR-S with mounting frame AR
(mounting frame AR only possible in -S design, pre-mounted ex works, delivery in loose form not possible)

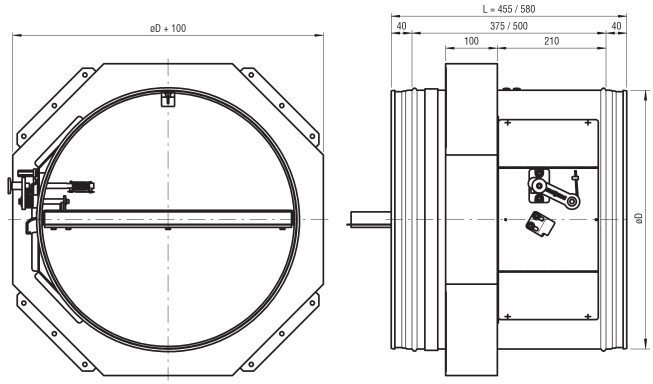

BSK-RPR-F (flanged connection)

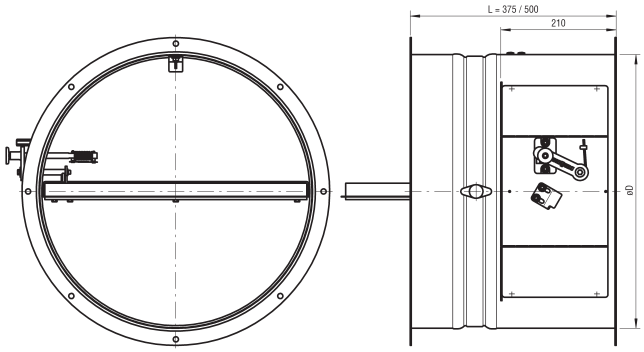

Available sizes

NW	ØD	L (mm)	
		BSK-RPR-S	BSK-RPR-F
100	98	**455 or 580 (standard)**	**375 or 500 (standard)**
125	123		
140	138		
160	158		
180	178		
200	198		
224	222		
250	248		
280	278		
315	313		
355	353		
400	398		
450	448		
500	498		

BKA-EN - Fire damper, rectangular

Properties

- Square design.
- For automatic closure of fire sections.
- Connection of a smoke release device with abZ (e.g. SCHAKO smoke detection system RMS) in combination with suitable release devices (e.g. spring return actuator) also possible.
- Housing leakage class C according to EN 1751.
- Integration is possible into the building management system using the SCHAKO EasyBus signalling and switching bus system or the SCHAKO fire damper mini-controller BKSYS.
- Depending on the installation situation, classification according to EN 13501-3 is EI 30 (v_e i ↔ o) S to EI 90 (v_e, h_o i ↔ o) S.
- Certified according to ATEX Directive 2014/34/EU.

Quick selection

Assumptions: L_{WA} = 35 dB(A)

H	B															
	200				300				400				500			
	V_{Sup} (m^3/h)	V_{Sup} [l/s]	V_{stirn} (m/s)	Δp (Pa)	V_{Sup} (m^3/h)	V_{Sup} [l/s]	V_{stirn} (m/s)	Δp (Pa)	V_{Sup} (m^3/h)	V_{Sup} [l/s]	V_{stirn} (m/s)	Δp (Pa)	V_{Sup} (m^3/h)	V_{Sup} [l/s]	V_{stirn} (m/s)	Δp (Pa)
200	447	124	3.1	10.6	739	205	3.5	9.9	1087	302	3.8	7.2	1362	378	3.8	6.5
300	801	222	3.7	13.4	1340	372	4.2	12.1	1776	493	4.1	7.2	2167	602	4.0	5.6
400	1181	328	4.1	15.0	1964	546	4.6	11.5	3146	874	5.5	5.9	3252	903	4.5	4.4
500	1525	424	4.3	15.2	2463	684	4.6	11.7	3514	976	4.9	4.8	4024	1118	4.5	4.1
600	1842	512	4.3	13.9	3008	836	4.7	11.5	4047	1124	4.7	4.5	4725	1312	4.4	4.0
700	2198	611	4.4	14.2	3407	946	4.5	10.7	4716	1310	4.7	4.5	5413	1503	4.3	3.9
800	2432	676	4.2	13.5	3873	1076	4.5	10.5	5391	1498	4.7	4.6	6152	1709	4.3	3.8

H	B															
	600				700				800				900			
	V_{Sup} (m^3/h)	V_{Sup} [l/s]	V_{stirn} (m/s)	Δp (Pa)	V_{Sup} (m^3/h)	V_{Sup} [l/s]	V_{stirn} (m/s)	Δp (Pa)	V_{Sup} (m^3/h)	V_{Sup} [l/s]	V_{stirn} (m/s)	Δp (Pa)	V_{Sup} (m^3/h)	V_{Sup} [l/s]	V_{stirn} (m/s)	Δp (Pa)
200	1567	435	3.7	5.9	1883	523	3.8	5.6	2072	576	3.6	5.1	2082	578	3.2	4.0
300	2766	768	4.3	5.7	3157	877	4.2	4.5	3500	972	4.0	3.5	3888	1080	4.0	3.4
400	3527	980	4.1	4.1	4067	1130	4.0	3.4	4961	1378	4.3	3.9	5129	1425	4.0	3.4
500	4203	1168	3.9	3.2	5082	1412	4.0	3.4	6108	1697	4.3	3.8	6386	1774	3.9	3.4
600	5079	1411	3.9	3.2	6101	1695	4.0	3.4	7176	1993	4.1	3.6	7568	2102	3.9	3.2
700	5914	1643	3.9	3.2	6893	1915	3.9	3.2	7818	2172	3.9	3.6	8555	2376	3.8	3.0
800	6762	1878	3.9	3.2	7588	2108	3.8	3.0	8605	2390	3.7	3.5	9417	2616	3.7	2.8

BKA-EN - Fire damper, rectangular

Assumptions: L_{WA} = 35 dB(A)

H	B															
	1000				1100				1200				1300			
	V_{Sup} (m^3/h)	V_{Sup} [l/s]	V_{stirn} [m/s]	Δp [Pa]	V_{Sup} (m^3/h)	V_{Sup} [l/s]	V_{stirn} [m/s]	Δp [Pa]	V_{Sup} (m^3/h)	V_{Sup} [l/s]	V_{stirn} [m/s]	Δp [Pa]	V_{Sup} (m^3/h)	V_{Sup} [l/s]	V_{stirn} [m/s]	Δp [Pa]
200	2312	642	3.3	4.0	2839	789	3.6	4.9	3076	854	3.6	4.9	3217	894	3.5	4.5
300	4302	1195	4.0	3.3	4914	1365	4.2	3.3	5218	1449	4.0	3.4	5539	1538	4.0	3.0
400	5760	1600	4.0	3.2	6510	1808	4.1	3.3	7112	1976	4.1	3.3	7430	2064	4.0	3.0
500	7199	2000	4.0	3.3	8171	2270	4.1	3.3	8478	2355	3.9	3.0	9270	2575	4.0	3.0
600	8596	2388	4.0	3.2	9445	2624	4.0	3.0	10228	2841	4.0	3.0	11051	3070	3.9	3.0
700	9638	2677	3.8	2.9	10952	3042	4.0	3.0	11290	3136	3.8	2.7	12314	3421	3.8	2.7
800	10340	2872	3.6	2.6	11896	3304	3.8	2.7	12283	3412	3.6	2.5	13360	3711	3.6	2.4

H	B							
	1400				1500			
	V_{Sup} (m^3/h)	V_{Sup} [l/s]	V_{stirn} [m/s]	Δp [Pa]	V_{Sup} (m^3/h)	V_{Sup} [l/s]	V_{stirn} [m/s]	Δp [Pa]
200	3960	1100	3.9	4.5	4277	1188	4.0	3.0
300	5932	1648	3.9	3.0	6430	1786	4.0	3.0
400	7965	2213	4.0	3.0	8482	2356	4.0	3.0
500	10014	2782	4.0	3.0	10700	2972	4.0	3.0
600	11901	3306	3.9	3.0	12862	3573	4.0	3.0
700	13122	3645	3.7	2.7	14395	3999	3.8	2.7
800	14292	3970	3.6	2.5	14666	4074	3.4	2.2

Assumptions: L_{WA} = 40 dB(A)

H	B															
	200				300				400				500			
	V_{Sup} (m^3/h)	V_{Sup} [l/s]	V_{stirn} [m/s]	Δp [Pa]	V_{Sup} (m^3/h)	V_{Sup} [l/s]	V_{stirn} [m/s]	Δp [Pa]	V_{Sup} (m^3/h)	V_{Sup} [l/s]	V_{stirn} [m/s]	Δp [Pa]	V_{Sup} (m^3/h)	V_{Sup} [l/s]	V_{stirn} [m/s]	Δp [Pa]
200	523	145	3.7	14.5	850	236	3.9	13.1	1312	364	4.6	10.5	1639	455	4.6	9.4
300	945	262	4.4	18.6	1567	435	4.9	16.5	2143	595	5.0	10.5	2516	699	4.7	7.5
400	1369	380	4.8	20.1	2297	638	5.3	15.8	3942	1095	6.9	9.2	3975	1104	5.5	6.6
500	1829	508	5.1	21.9	2932	814	5.5	16.6	4303	1195	6.1	7.6	4882	1356	5.4	6.1
600	2233	620	5.2	20.5	3585	996	5.6	16.4	5070	1408	5.9	7.1	5770	1603	5.4	5.8
700	2682	745	5.4	21.1	4067	1130	5.4	15.3	5910	1642	5.9	7.1	6616	1838	5.3	5.8
800	2962	823	5.2	20.1	4624	1284	5.4	14.9	6755	1876	5.9	7.2	7586	2107	5.3	6.1

BKA-EN - Fire damper, rectangular

Assumptions: L_{WA} = 40 dB(A)

H	B															
	600				700				800				900			
	V_{Sup} (m^3/h)	V_{Sup} [l/s]	V_{stirn} [m/s]	Δp [Pa]	V_{Sup} (m^3/h)	V_{Sup} [l/s]	V_{stirn} [m/s]	Δp [Pa]	V_{Sup} (m^3/h)	V_{Sup} [l/s]	V_{stirn} [m/s]	Δp [Pa]	V_{Sup} (m^3/h)	V_{Sup} [l/s]	V_{stirn} [m/s]	Δp [Pa]
200	1859	516	4.3	8.3	2312	642	4.6	8.5	2562	712	4.5	7.9	2555	710	4.0	6.0
300	3298	916	5.1	8.0	3735	1038	4.9	6.3	4286	1191	5.0	5.2	4860	1350	5.0	5.3
400	4198	1166	4.9	5.8	4856	1349	4.8	4.8	6333	1759	5.5	6.3	6428	1786	5.0	5.3
500	4996	1388	4.7	4.5	6066	1685	4.8	4.8	7797	2166	5.4	6.1	8033	2232	4.9	5.3
600	6037	1677	4.7	4.5	7285	2023	4.8	4.8	9160	2544	5.3	5.9	9491	2636	4.9	5.0
700	7027	1952	4.7	4.5	8230	2286	4.7	4.5	9979	2772	5.0	5.8	10725	2979	4.8	4.7
800	8057	2238	4.7	4.5	9059	2517	4.5	4.3	11097	3083	4.8	5.7	11809	3280	4.6	4.4

H	B															
	1000				1100				1200				1300			
	V_{Sup} (m^3/h)	V_{Sup} [l/s]	V_{stirn} [m/s]	Δp [Pa]	V_{Sup} (m^3/h)	V_{Sup} [l/s]	V_{stirn} [m/s]	Δp [Pa]	V_{Sup} (m^3/h)	V_{Sup} [l/s]	V_{stirn} [m/s]	Δp [Pa]	V_{Sup} (m^3/h)	V_{Sup} [l/s]	V_{stirn} [m/s]	Δp [Pa]
200	2848	791	4.0	6.0	3865	1074	4.9	9.1	4172	1159	4.8	8.9	4368	1213	4.7	8.3
300	5333	1481	4.9	5.1	6133	1704	5.2	5.2	7120	1978	5.5	6.3	7176	1993	5.1	5.1
400	7372	2048	5.1	5.3	8048	2236	5.1	5.0	9164	2546	5.3	5.5	9676	2688	5.2	5.1
500	9221	2562	5.1	5.4	10151	2820	5.1	5.1	10955	3043	5.1	5.0	12031	3342	5.2	5.1
600	10892	3026	5.0	5.2	12306	3418	5.2	5.1	13305	3696	5.1	5.1	14322	3978	5.1	5.1
700	12207	3391	4.8	4.7	14213	3948	5.1	5.1	14666	4074	4.9	4.6	16029	4452	4.9	4.6
800	12759	3544	4.5	4.0	15538	4316	4.9	4.7	16010	4447	4.7	4.2	17338	4816	4.7	4.1

H	B							
	1400				1500			
	V_{Sup} (m^3/h)	V_{Sup} [l/s]	V_{stirn} [m/s]	Δp [Pa]	V_{Sup} (m^3/h)	V_{Sup} [l/s]	V_{stirn} [m/s]	Δp [Pa]
200	5201	1445	5.2	7.5	5585	1551	5.2	5.2
300	7686	2135	5.1	5.1	8379	2328	5.2	5.1
400	10342	2873	5.1	5.1	10970	3047	5.1	5.0
500	13041	3622	5.2	5.1	13944	3873	5.2	5.1
600	15495	4304	5.1	5.1	16749	4653	5.2	5.1
700	17041	4734	4.8	4.6	18651	5181	4.9	4.5
800	18548	5152	4.6	4.1	19085	5301	4.5	3.8

BKA-EN - Fire damper, rectangular

Assumptions: L_{WA} = 45 dB(A)

H	B															
	200				300				400				500			
	V_{Sup} (m^3/h)	V_{Sup} [l/s]	V_{stirn} [m/s]	Δp [Pa]	V_{Sup} (m^3/h)	V_{Sup} [l/s]	V_{stirn} [m/s]	Δp [Pa]	V_{Sup} (m^3/h)	V_{Sup} [l/s]	V_{stirn} [m/s]	Δp [Pa]	V_{Sup} (m^3/h)	V_{Sup} [l/s]	V_{stirn} [m/s]	Δp [Pa]
200	611	170	4.3	19.9	976	271	4.5	17.2	1583	440	5.5	15.2	1974	548	5.6	13.6
300	1115	310	5.1	25.9	1832	509	5.7	22.5	2586	718	6.0	15.3	2921	811	5.6	10.1
400	1587	441	5.5	27.0	2687	746	6.2	21.6	4939	1372	8.6	14.5	4858	1350	6.8	9.8
500	2194	610	6.1	31.6	3490	969	6.5	23.6	5517	1532	7.7	11.9	5922	1645	6.6	9.0
600	2705	751	6.3	30.0	4272	1187	6.6	23.2	6352	1764	7.4	11.2	7045	1957	6.5	8.9
700	3274	909	6.5	31.5	4856	1349	6.4	21.8	7405	2057	7.4	11.1	8085	2246	6.4	8.7
800	3639	1011	6.3	30.3	5520	1533	6.4	21.3	8463	2351	7.4	11.3	9333	2592	6.5	8.8

H	B															
	600				700				800				900			
	V_{Sup} (m^3/h)	V_{Sup} [l/s]	V_{stirn} [m/s]	Δp [Pa]	V_{Sup} (m^3/h)	V_{Sup} [l/s]	V_{stirn} [m/s]	Δp [Pa]	V_{Sup} (m^3/h)	V_{Sup} [l/s]	V_{stirn} [m/s]	Δp [Pa]	V_{Sup} (m^3/h)	V_{Sup} [l/s]	V_{stirn} [m/s]	Δp [Pa]
200	2205	613	5.1	11.7	2837	788	5.7	12.8	3168	880	5.5	12.0	3136	871	4.9	9.1
300	3933	1092	6.0	11.4	4418	1227	5.9	8.8	5248	1458	6.1	7.9	6128	1702	6.3	8.4
400	4997	1388	5.8	8.1	5798	1611	5.8	6.9	8149	2264	7.1	10.6	8054	2237	6.3	8.3
500	5936	1649	5.5	6.4	7243	2012	5.8	6.9	9952	2764	6.9	10.0	10030	2786	6.2	8.3
600	7173	1992	5.6	6.4	8698	2416	5.8	6.9	11692	3248	6.8	9.6	11890	3303	6.1	7.9
700	8350	2320	5.5	6.4	9827	2730	5.6	6.4	12735	3538	6.3	9.5	13437	3732	5.9	7.4
800	9576	2660	5.6	6.4	10817	3005	5.4	6.1	14009	3891	6.1	9.3	14794	4110	5.7	6.9

H	B															
	1000				1100				1200				1300			
	V_{Sup} (m^3/h)	V_{Sup} [l/s]	V_{stirn} [m/s]	Δp [Pa]	V_{Sup} (m^3/h)	V_{Sup} [l/s]	V_{stirn} [m/s]	Δp [Pa]	V_{Sup} (m^3/h)	V_{Sup} [l/s]	V_{stirn} [m/s]	Δp [Pa]	V_{Sup} (m^3/h)	V_{Sup} [l/s]	V_{stirn} [m/s]	Δp [Pa]
200	3508	974	4.9	9.2	5264	1462	6.7	16.9	5656	1571	6.6	16.4	5932	1648	6.4	15.3
300	6611	1837	6.1	7.8	7654	2126	6.5	8.1	9847	2735	7.6	12.0	9296	2582	6.6	8.5
400	9436	2621	6.6	8.7	9952	2764	6.3	7.6	11809	3280	6.8	9.1	12601	3500	6.7	8.7
500	11811	3281	6.6	8.8	12610	3503	6.4	7.8	14158	3933	6.6	8.4	15617	4338	6.7	8.6
600	13797	3833	6.4	8.3	16036	4454	6.8	8.7	17306	4807	6.7	8.7	18544	5151	6.6	8.5
700	15460	4294	6.1	7.5	18450	5125	6.7	8.6	19050	5292	6.3	7.8	20864	5796	6.4	7.8
800	15740	4372	5.5	6.1	20291	5636	6.4	7.9	20869	5797	6.0	7.1	22496	6249	6.0	6.9

BKA-EN - Fire damper, rectangular

Assumptions: L_{WA} = 45 dB(A)

H	B							
	1400				1500			
	V_{Sup} (m^3/h)	V_{Sup} [l/s]	V_{stirn} [m/s]	Δp [Pa]	V_{Sup} (m^3/h)	V_{Sup} [l/s]	V_{stirn} [m/s]	Δp [Pa]
200	6831	1898	6.8	12.9	7291	2025	6.8	8.8
300	9961	2767	6.6	8.5	10917	3032	6.7	8.7
400	13431	3731	6.7	8.6	14171	3936	6.6	8.4
500	16986	4718	6.8	8.7	18055	5015	6.7	8.6
600	20147	5596	6.7	8.6	21782	6051	6.7	8.6
700	22126	6146	6.3	7.8	24171	6714	6.3	7.6
800	24077	6688	6.0	7.0	24900	6917	5.8	6.5

Dimensions

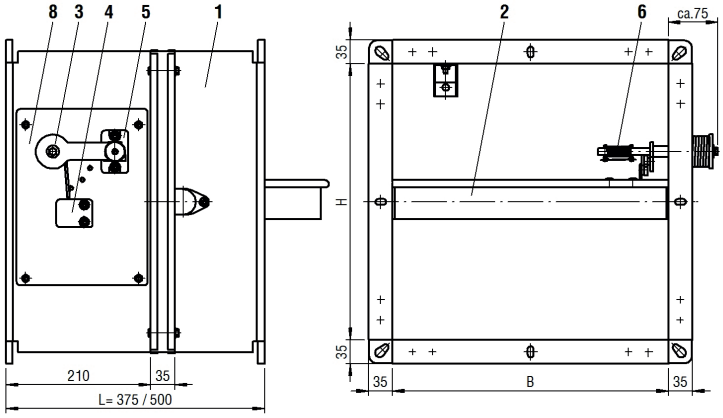

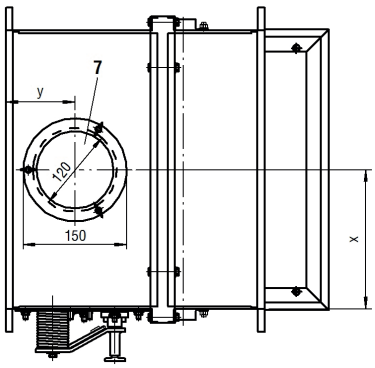

1 Fire damper BKA-EN
2 Damper blade
3 Hand lever
4 Locking profile
5 Release device
6 Fusible link
7 Inspection openings on opposite sides
B < 800 -> x = B/2
B ≥ 800 -> x ~ 260mm
y ~ 100 mm from the connection flange
8 Actuator unit

Available sizes

B	H
200	200
225	225
250	250
275	275
300	300
325	325
350	350
375	375
400	400
450	450
500	500
550	550
600	600
650	650
700	700
750	750
800	800
900	
1000	
1100	
1200	
1300	
1400	
1500	

Air-water products

DISA-300 - Ceiling induction diffuser 300

Properties

- High energy efficient air diffuser with water register and high air induction factor.
- Very high cooling/heating capacities with low noise emissions.
- Configurable without restrictions: corner piece, blind part, exhaust air only or 1-sided diffuser.
- Compact design.
- Secondary air grille removable without tools.
- (Optional) with air deflection blades to deflect the air jet in the required direction.

Quick selection

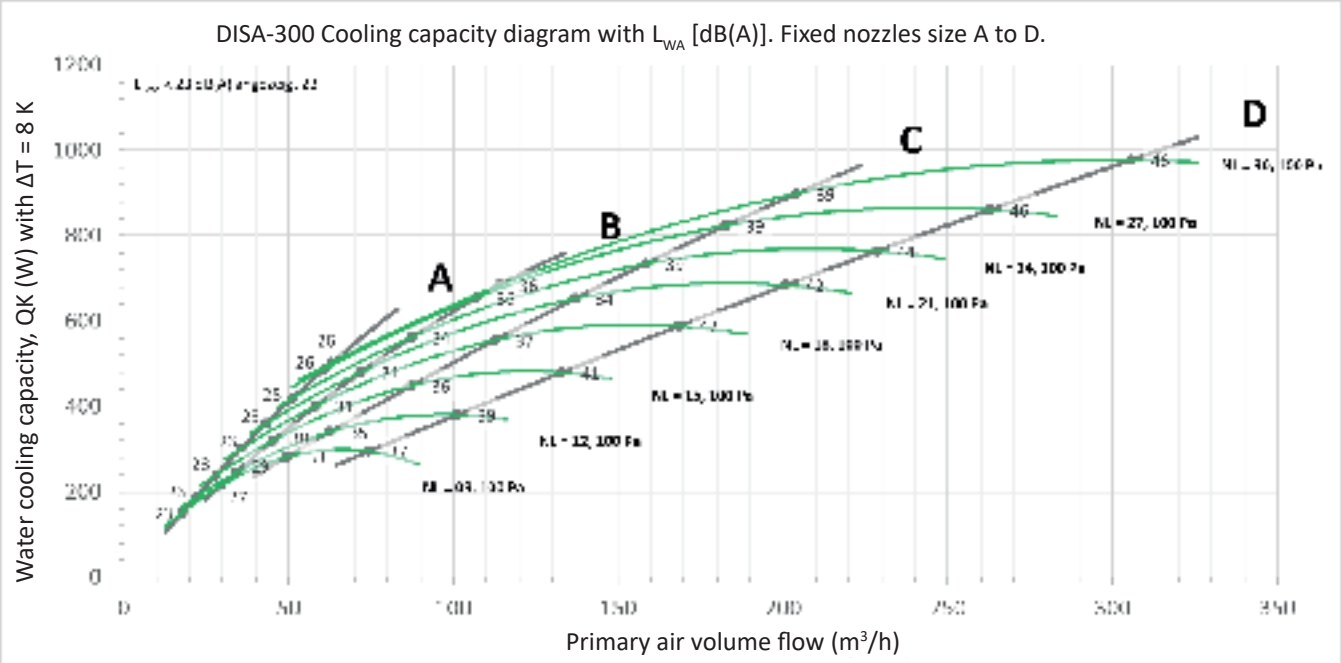

DISA-300 - Ceiling induction diffuser 300

DISA-300													
2-pipe register										4-pipe register		L_{WA}	
Air				QKL		QKW		QHW		QHW			
				ΔT_L = 6 K		ΔT_{R-WV} = 8 K		ΔT_{R-WV} = 20 K		ΔT_{R-WV} = 20 K			
NL	(Pa)	(m³/h)	(m³/h)	(W)	(W)	(W)	(W)	(W)	(W)	(W)	(W)	[dB(A)]	[dB(A)]
Nozzle size ->		A	D	A	D	A	D	A	D	A	D	A	D
900	50	11	50	21	100	93	212	227	526	177	388	20	30
900	100	15	71	30	142	133	298	326	737	249	526	22	37
900	150	18	87	37	174	162	353	401	872	302	610	27	43
1200	50	16	74	31	149	133	285	325	692	255	518	20	29
1200	100	22	105	44	210	187	380	456	915	352	667	23	39
1200	150	27	129	54	257	225	440	548	1053	417	757	28	44
1500	50	20	95	40	190	170	358	414	864	327	651	20	32
1500	100	28	134	57	268	238	479	578	1140	449	838	23	41
1500	150	35	164	69	328	285	554	692	1304	530	945	29	46
1800	50	25	119	50	238	212	444	518	1060	410	803	20	34
1800	100	36	168	71	336	297	589	722	1380	562	1020	23	42
1800	150	44	206	87	412	355	671	859	1552	660	1132	29	48
2100	50	29	139	59	279	249	512	607	1214	484	926	20	37
2100	100	42	197	83	394	348	686	842	1588	659	1182	23	42
2100	150	51	241	102	483	414	778	996	1771	771	1304	29	47
2400	50	34	160	67	320	284	579	694	1368	558	1054	20	35
2400	100	48	226	95	452	398	767	962	1764	760	1329	25	44
2400	150	58	277	117	554	473	878	1135	1984	887	1477	30	49
2700	50	38	182	77	364	324	649	789	1519	637	1178	20	37
2700	100	54	258	109	515	453	863	1091	1956	866	1484	26	46
2700	150	67	315	133	631	536	979	1280	2175	1005	-	31	51
3000	50	43	204	86	409	360	674	869	1524	706	1198	20	38
3000	100	61	289	122	578	497	977	1176	2129	940	1627	26	46
3000	125	68	323	136	646	542	976	1271	-	1011	1602	29	50

V_Water cooling/heating: 250/150 l/h

DISA-300 - Ceiling induction diffuser 300

Dimensions

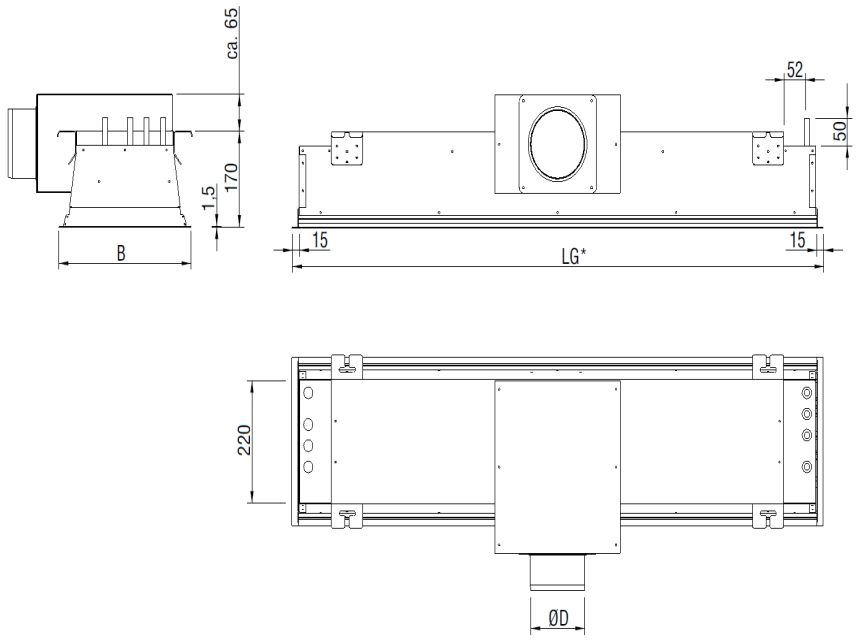

Available sizes

Length (mm)	ØD (mm)	B (mm)
NL: 900 - 1200 - 1500 - 1800 - 2100 - 2400 - 2700 - 3000 LG standard: 892 to 3000 LG dummy piece or only return air: 200 to 3000	98 123 148	298 600 (-FM)

FM: freely suspended installation

DISA-360 - Ceiling induction diffuser

Properties

- For integrated and positive-locking installation in grid ceilings or in freely suspended ceiling sails.
- For installation heights from 2.6 to 4 m.
- Cooling - ΔTprim 8K / ΔT_{Winlet} 8K: 260 to 1780 W.
- Heating: ΔT_{Prim} iso / ΔT_{Winlet} 20 K: up to 1300 W.
- Maintenance- and installation-friendly.
- Thanks to its low installation height, the DISA-360 is also suitable for low suspended ceiling heights.
- Secondary air grille can pivot without tools for easy cleaning.
- Energy saving thanks to reduced primary air.
- Low noise level.
- 4-way throw for optimum air distribution and excellent reduction in temperature.

Dimensions

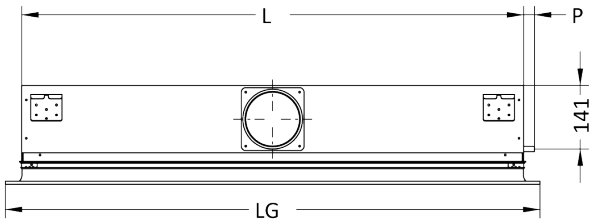

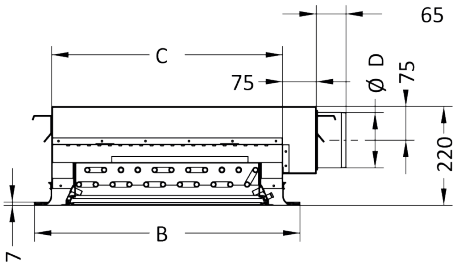

with perforated sheet grille (-SR/-SQ/-RE/-OB)

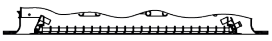

with louvre grille (-PA)

	BxLG							
	592x592	592x1192	597x57	597x1197	617x617	617x1242	622x622	622x1247
L (mm)	519	1119	524	1124	519	1144	524	1149
C (mm)	515		520		515		520	
D (mm)	98/123							
P (mm)	24	24	22	22	24	12	22	9
-FM (mm)	900x900	900x1500	900x900	900x1500	900x900	900x1500	900x900	900x1500

Weights DISA-360

NL	600	1200
Weights[1] (kg)	14.5	28

[1] Standard unit: housing, slot, grille and heat exchanger (empty).

DISA-360 - Ceiling induction diffuser

Spigot position

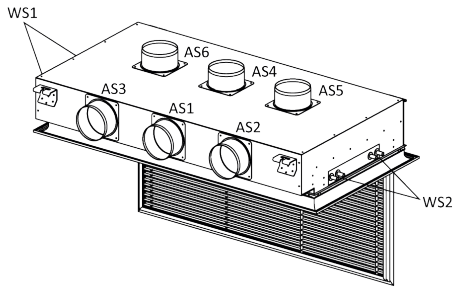

Horizontal connection (-H)

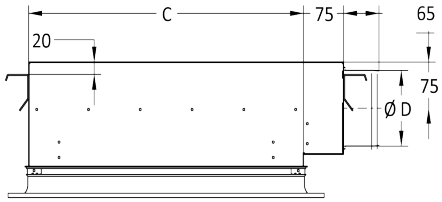

Vertical connection (-V)

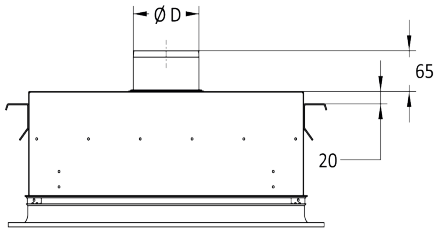

Horizontal connection (-H)
with 1 connecting piece (-AS1)

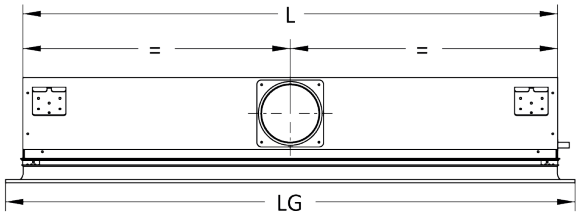

with 2 connecting pieces (-AS2/AS3)

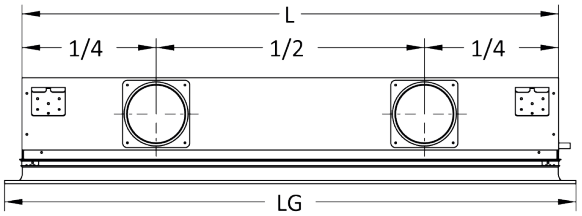

Vertical connection (-V)
with 1 connecting piece (-AS4)

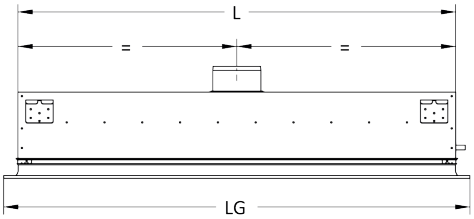

with 2 connecting pieces (-AS5/AS6)

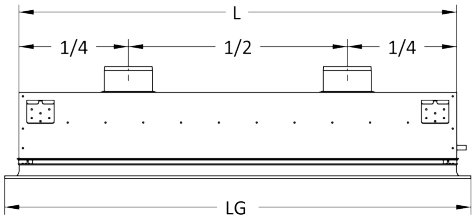

D601 - Ceiling induction diffuser 601

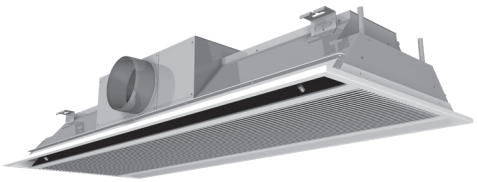

Properties

- High energy efficient air diffuser with water register and high air induction factor.
- Very high cooling/heating capacities with low noise emissions.
- Mechanically adjustable induction nozzle system (optional).
- Configurable without restrictions: corner piece, blind part, exhaust air only or 1-sided diffuser.
- Secondary air grille removable without tools.
- Register can pivot without tools for hygienic cleaning (optional).
- Secondary air filter, removable without tools (optional).
- (Optional) with air deflection blades to deflect the air jet in the required direction.

Quick selection

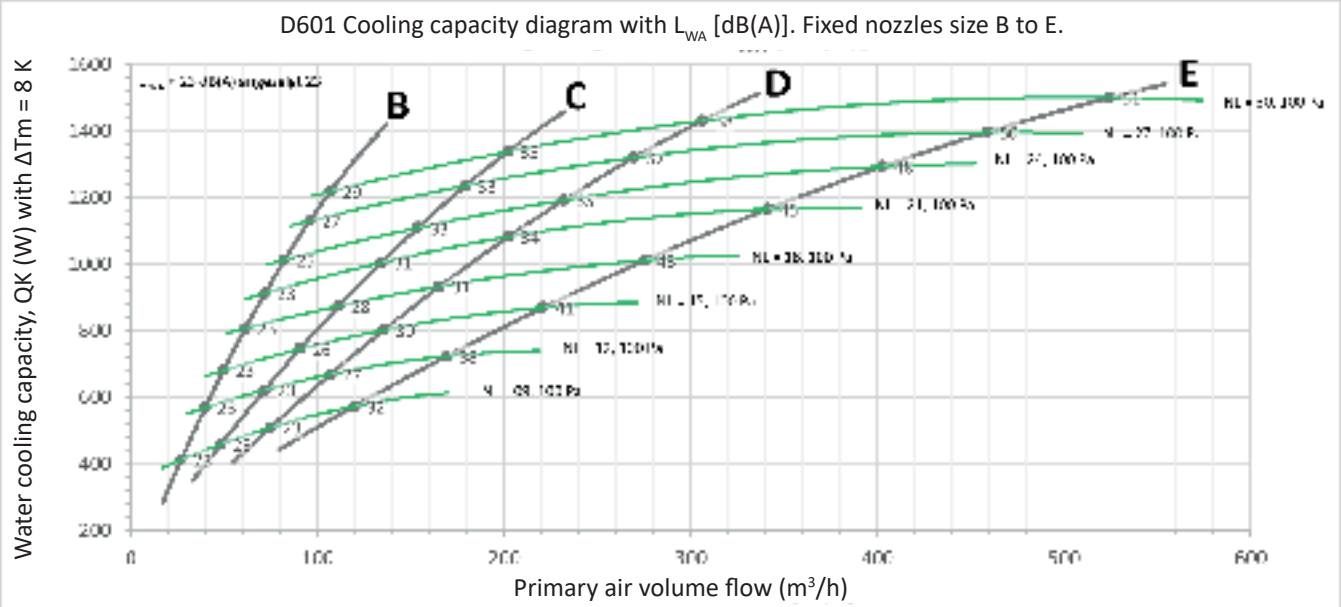

D601 - Ceiling induction diffuser 601

D601 fixed nozzles (B-C-D-E)													
-2F (2-pipe register)										-4F (4-pipe register)		L_{WA}	
Air				QKL		QKW		QHW		QHW			
				ΔT_L = 6 K		ΔT_{R-WV} = 8 K		ΔT_{R-WV} = 20 K		ΔT_{R-WV} = 20 K			
NL	(Pa)	(m³/h)	(m³/h)	(W)	(W)	(W)	(W)	(W)	(W)	(W)	(W)	[dB(A)]	[dB(A)]
Nozzle size ->		B	E	B	E	B	E	B	E	B	E	B	E
09	50	18	85	36	170	282	465	647	1052	493	709	23	26
09	100	26	120	51	240	408	574	934	1294	703	879	23	32
09	150	31	147	63	294	483	638	1103	1431	824	977	23	38
12	50	27	126	54	251	395	599	886	1347	679	1027	23	29
12	100	38	178	76	355	562	729	1246	1628	945	1236	23	38
12	150	47	218	93	435	656	799	1445	1780	1091	1349	23	44
15	50	34	160	69	320	497	727	1114	1606	861	1235	23	34
15	100	49	227	97	453	678	883	1502	1930	1156	1478	23	41
15	150	59	278	119	555	783	969	1726	2103	1325	1607	25	45
18	50	43	201	86	402	608	833	1346	1826	1048	1428	23	37
18	100	61	284	122	569	805	999	1759	2165	1368	1696	23	43
18	150	75	348	149	696	920	1087	1995	2344	1550	1839	26	47
21	50	50	236	101	471	673	986	1479	2116	1158	1659	23	38
21	100	71	333	143	666	915	1168	1973	2472	1547	1942	23	45
21	150	87	408	175	816	1047	1265	2237	2656	1756	2092	28	50
24	50	58	270	116	540	751	1082	1635	2297	1290	1822	23	40
24	100	82	382	163	764	1020	1279	2177	2673	1722	2129	25	48
24	150	100	468	200	936	1163	1382	2454	2867	1944	2288	31	52
27	50	66	308	132	616	883	1192	1899	2487	1507	1979	23	43
27	100	93	435	186	871	1149	1409	2420	2878	1927	2299	27	50
27	150	114	533	228	1066	1292	1533	2690	3088	2147	2469	31	54
30	50	74	346	148	691	925	1272	1983	2633	1580	2117	23	44
30	100	105	489	209	977	1213	1498	2533	3040	2042	2456	29	51
30	150	128	599	256	1197	1375	1617	2831	3246	2288	2629	33	55

V_Water cooling/heating: 250/150 l/h.

D601 - Ceiling induction diffuser 601

D601 Cooling capacity diagram with L_{WA} [dB(A)]. Cooling capacity diagram with LWA. Adjustable nozzles (-V) Opening %

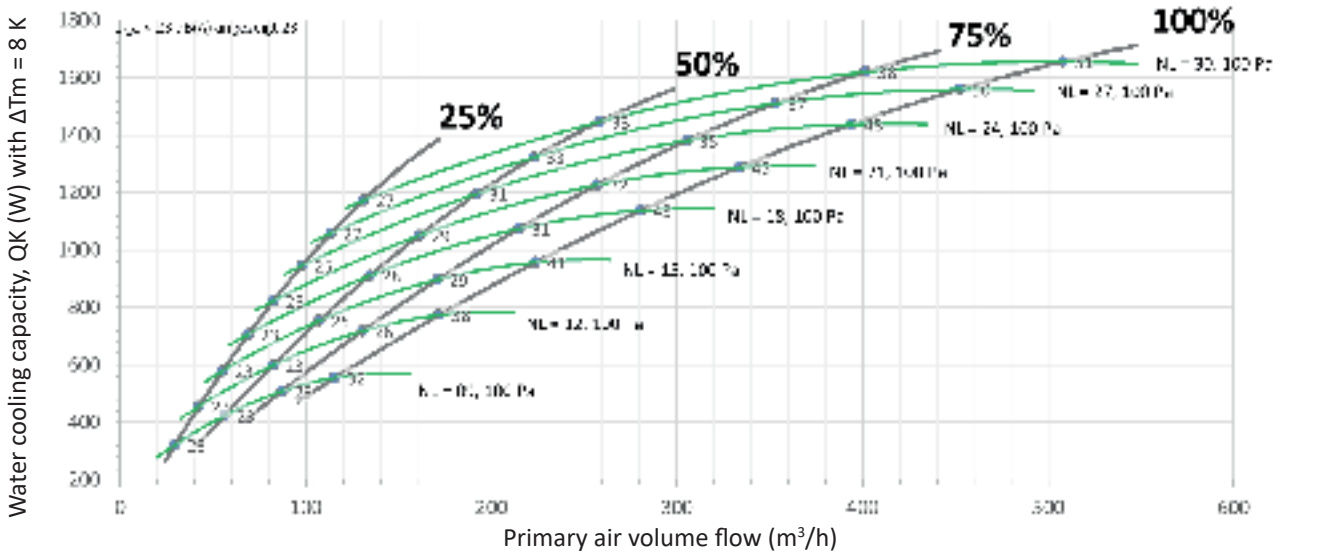

D601 - Ceiling induction diffuser 601

D601 Variable adjustable nozzles (nozzle opening % 25 - 50 - 75 - 100)													
-2F (2-pipe register)										-4F (4-pipe register)		L_{WA}	
Air				QKL		QKW		QHW		QHW			
				ΔT_L = 6 K		ΔT_{R-WV} = 8 K		ΔT_{R-WV} = 20 K		ΔT_{R-WV} = 20 K			
NL	(Pa)	(m³/h)	(m³/h)	(W)	(W)	(W)	(W)	(W)	(W)	(W)	(W)	[dB(A)]	[dB(A)]
Opening % ->		25	100	25	100	25	100	25	100	25	100	25	100
09	50	21	87	42	173	237	440	593	1068	379	591	23	26
09	100	30	124	60	247	322	565	797	1339	472	710	23	32
09	150	37	152	74	304	380	646	933	1507	532	786	23	38
12	50	30	125	60	250	339	616	842	1464	533	818	23	29
12	100	44	179	87	357	457	780	1116	1791	659	974	23	38
12	150	54	220	108	439	536	884	1293	1983	739	1072	23	43
15	50	39	160	77	320	431	772	1064	1793	673	1019	23	34
15	100	56	229	112	458	578	965	1394	2148	828	1204	23	41
15	150	69	282	138	563	675	1084	1600	2344	925	1318	23	45
18	50	48	199	96	397	529	927	1293	2098	815	1215	23	37
18	100	69	284	138	567	703	1143	1668	2455	995	1423	23	43
18	150	86	349	171	698	817	1271	1894	2642	1107	1550	26	47
21	50	56	234	113	468	617	1063	1496	2346	943	1388	23	38
21	100	81	334	163	668	815	1294	1903	2689	1146	1615	23	45
21	150	101	411	201	822	942	1427	2139	2859	1270	1750	28	50
24	50	66	272	131	545	711	1200	1704	2572	1076	1561	23	40
24	100	95	389	190	778	931	1439	2133	2888	1299	1801	25	48
24	150	117	479	234	957	1070	1573	2370	3035	1434	1942	29	52
27	50	74	308	148	615	796	1316	1885	2748	1195	1711	23	43
27	100	107	439	214	879	1034	1559	2324	3033	1434	1960	27	50
27	150	132	540	265	1081	1181	1690	2557	3157	1578	2104	31	54
30	50	84	346	167	692	885	1432	2067	2904	1318	1860	23	44
30	100	121	494	241	988	1140	1673	2507	3152	1571	2115	27	51
30	150	149	608	298	1216	1293	1798	2729	3253	1722	2259	33	55

V_Water cooling/heating: 250/150 l/h

DISA-601 – Ceiling induction diffuser

Dimensions

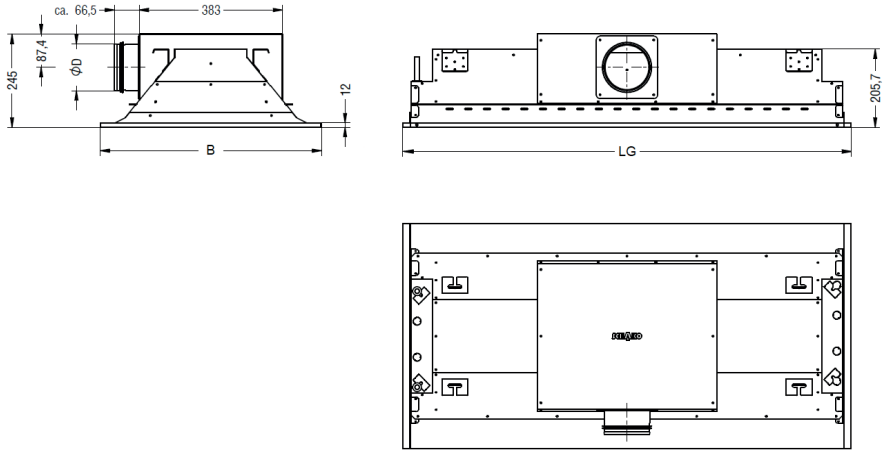

Available sizes

Length (mm)	ØD (mm)	B (mm)
NL: 900 (09)- 1200 (12)- 1500 (15)- 1800 (18)- 2100 (21)- 2400 (24)- 2700 (27)- 3000 (30) LG Standard (A) or only air (0): 852 to 3000 LG dummy piece (R) or only return air (D): 200 to 3000	98 123 148 158	592 (B1)
		595 (B2)
		597 (B3)
		617 (B4)
		622 (B5)
		900 (B6)

DISA-B - Floor induction diffuser

Properties

- For integrated installation in floors in rooms without false ceiling (e.g. room-high glazing), air-conditioning only permitted via the floor.
- Installation height: 190 mm; width: 375 mm.
- Cooling: ΔT_{Prim} 8 K / ΔT_{Winlet} 10 K: 200 to 680 W/metre.
- Heating: ΔT_{Prim} iso / ΔT_{Winlet} 20 K:
  - for 2-pipe system: 350 to 980 W/metre.
  - for 4-pipe system: 255 to 520 W/metre.
- Maintenance- and installation-friendly.
- Optimum air distribution.
- Short heating time.
- Energy saving thanks to reduced primary air.
- Low noise level.
- Elegant and non-slip aluminium grilles oriented longitudinally or transversely (roll-down grille). Easy to clean.
- Ideal in combination with thermal activation of building structures

Dimensions

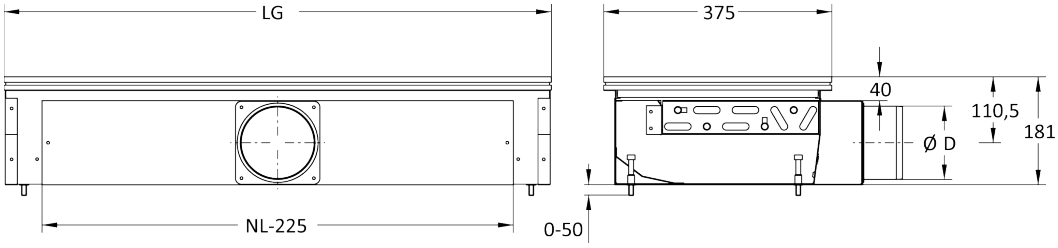

NL (mm) = nominal length (1000 / 1150 / 1300 / 1450 / 1600 / 1750)
LG (mm) = total length
- without valve group integrated on site: (2000 > LG ≥ NL)
- with valve group integrated on site: (2000 > LG ≥ NL+150)

øD (mm) = diameter of the connection spigot (98 and 123)

Weights DISA-B

NL	1000	1150	1300	1450	1600	1750
Weights[1] (kg)	18.5	21	23	25.5	28	30.5

[1] Standard unit: housing, grille and heat exchanger (empty).

DISA-B - Floor induction diffuser

Spigot position

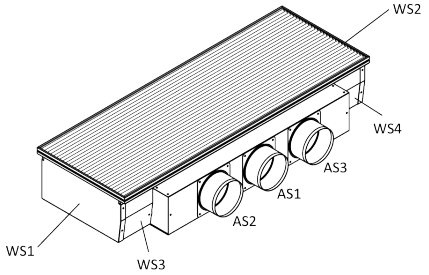

1 horizontal connecting spigot (-AS1)

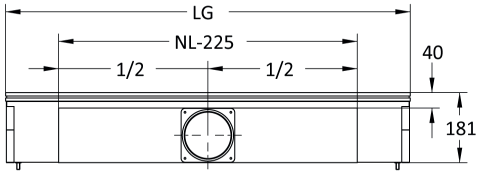

2 horizontal spigots (-AS2 / AS3)

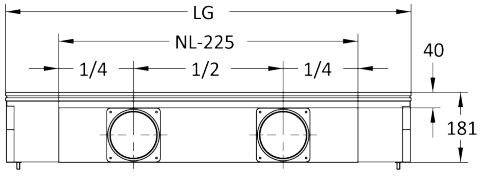

Primary air connection spigot connection

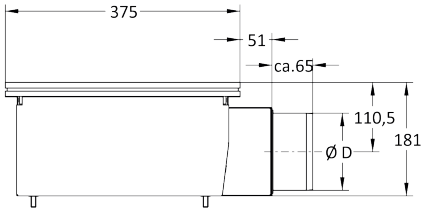

Position of primary air plenum box

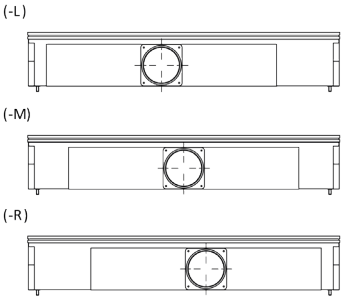

DISA-H - Induction diffuser

Properties

- For integrated installation in walls, entrance corridors or ceiling panelling in rooms without suspended false ceiling and low fresh air demand.
- For installation heights from 2.6 to 4 m.
- Cooling: ΔT_{Prim} 8 K / ΔT_{Winlet} 8 K: 335 to 1300 W/metre.
- Heating: ΔT_{Prim} iso / ΔT_{Winlet} 20 K: up to 940 W/metre (for 4-pipe).
- Maintenance- and installation-friendly.
- Energy saving thanks to reduced primary air.
- Low noise level.
- Horizontal air flow.
- Secondary air grille, pivotable without tools, and an optional secondary air filter, removable without tools.
- Optimised for SCHAKO supply and secondary air grilles PA | IB | AL.

Dimensions

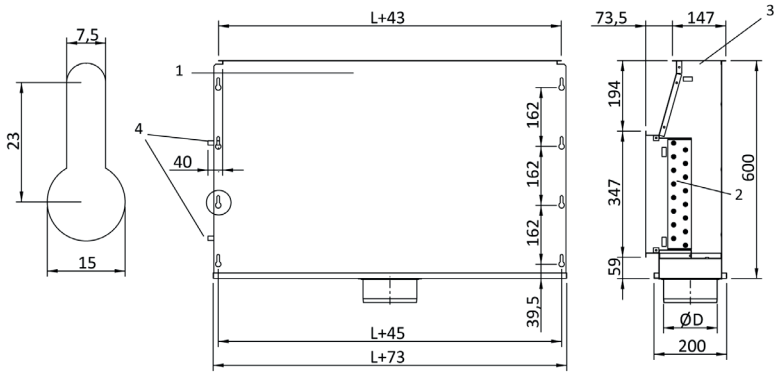

1 Housing
2 Heat exchanger
3 Supply air inlet
4 Water connection

L (mm) = length (900, 1200 and 1500)
øD (mm) = diameter of the connection spigots (98, 123 and 148)

Weights DISA-H

NL	900	1200	1500
Weights[1] (kg)	19	23	28

[1] Standard unit: housing + heat exchanger (empty)

DISA-H - Induction diffuser

Spigot position

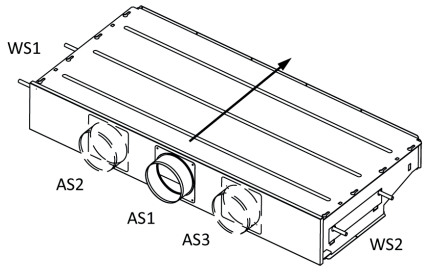

1 spigot (-AS1)

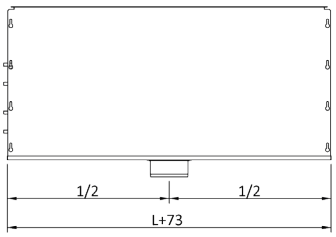

2 spigots (-AS2/AS3)

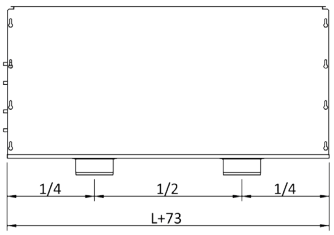

DISA-W - Wall induction diffuser

Properties

- For integrated installation in walls or in ceiling panelling in rooms without suspended false ceiling and low fresh air demand.
- For installation heights from 2.6 to 4 m.
- Cooling: ΔT_{Prim} 8K/ ΔT_{Winlet} 10 K: 250 to 690 W/metre; ΔT_{prim} 8 K/ΔT_{Winlet} 14 K: 330 to 820 W/metre.
- Heating: ΔT_{Prim} iso / ΔT_{Winlet} 20 K:
  - for 2-pipe system: 220 to 580 W/metre.
  - for 4-pipe system: 180 to 430 W/metre.
- Maintenance- and installation-friendly.
- Energy saving thanks to reduced primary air.
- Low noise level.
- High thermal loads possible with minimal, hygienically necessary air exchange.
- Also ideal for reconstructions in existing systems.
- Band design also available.

Dimensions

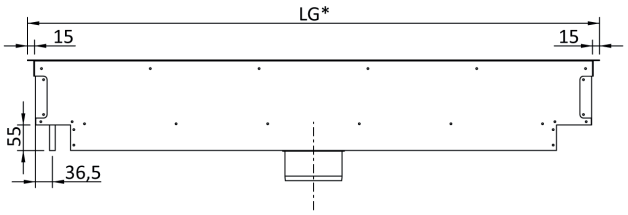

with louvre grille (-PA)

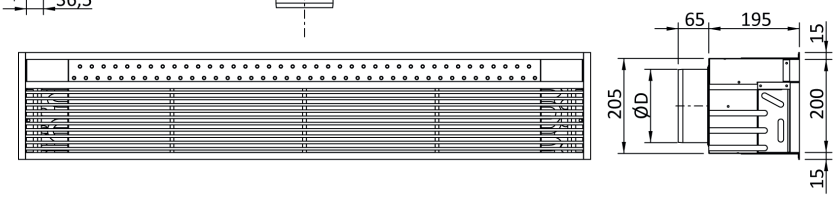

with perforated sheet grille (-SR/-SQ/-RE/-OB)

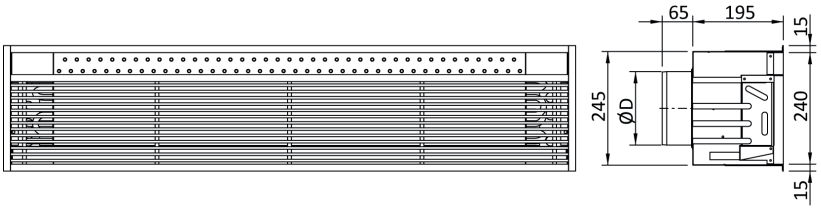

with perforated sheet grille (-SR/-SQ/-RE/-OB)

LG* (mm) = total length of the device with and without end pieces
øD (mm) = diameter of the connection spigots (98, 123 and 148)

Weights DISA-W

NL	900	1200	1500	1800	2100	2400	2700	3000
Weights[1] (kg)	11	14	17	20	23	27	30	33

[1] Standard unit: housing, slot, grille and heat exchanger (empty).

DISA-W - Wall induction diffuser

Spigot position

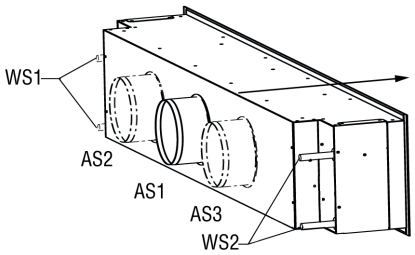

Connections seen in air flow direction
- 1 connection spigot (standard) at rear, centre (-AS1)
- 2 connection spigots at rear, left and right (-AS3/-AS2)

1 spigot (-AS1)

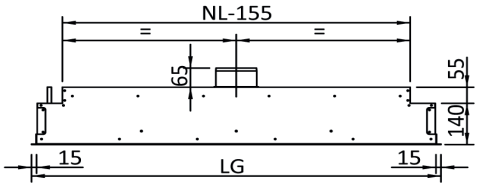

2 spigots (-AS2/AS3)

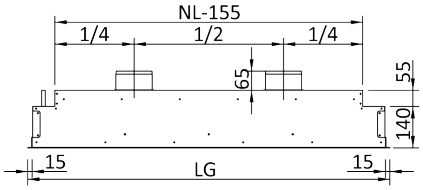

AQUARIS SILENT – Fan coil unit

Properties

- The fan convectors specially designed for the decentralised use, for heating or cooling with recirculating air mode.
- Flexible mounting and installation versions.
- High cooling and heating capacities.
- Energy-efficient, decentralised air-conditioning.
- Solid, compact design.
- Easy installation and maintenance.

Dimensions

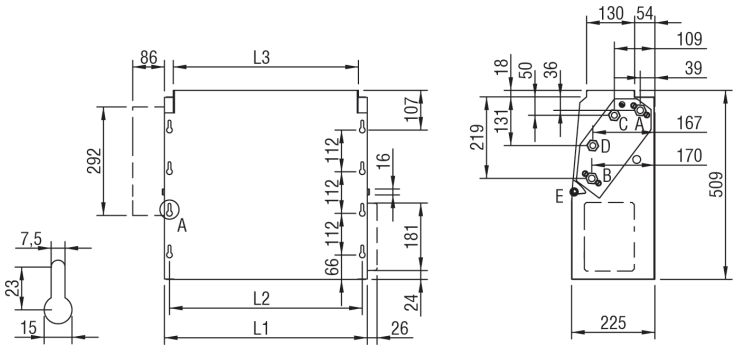

Left side view (air flow direction).

The electric connection on the standard model is located opposite to the hydraulic connection side.

Available sizes

NW	Dimensions (mm)					Weight (kg)		Water capacity of the registers (l)	
	L1	L2	L3	L4	L5	G1	G2	3 rows	1 row
10/11	697	670	645	649	755	14	20	1.2	0.3
20/21	912	885	860	864	970	20	28	1.6	0.4
30/31	1247	1220	1195	1199	1305	25	36	2.3	0.6
40/41	1352	1325	1300	1304	1410	32	46	2.5	0.7
50/51	1597	1570	1545	1549	1655	35	49	3.0	0.9

A = cold water outlet (cylindrical internal thread, EN 10226-1 Rp 1/2)

B = cold water outlet (cylindrical internal thread, EN 10226-1 Rp 1/2)

C = cold water outlet (cylindrical internal thread, EN 10226-1 Rp 1/2)

D = cold water outlet (cylindrical internal thread, EN 10226-1 Rp 1/2)

E = condensate drain DN16 mm (external)

G1 = Weight of the base unit

G2 = Weight of the base unit, including device casing

AQUARIS KWB - Compact air-conditioning module

Properties

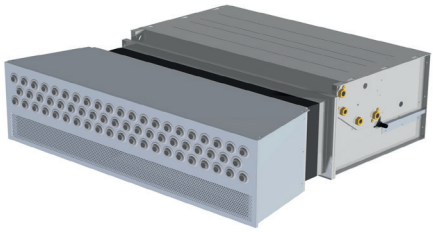

- The compact air-conditioning module AQUARIS SILENT has been designed for installation in suspended corridor ceilings for the air-conditioning of office rooms.
- Supply air is delivered into the room at an angle from one side.
- The evolving forced air circulation enables optimum room flow and fresh supply air is distributed uniformly over the entire room.

Quick selection

Assumptions for AQUARIS KWB 10

Water inlet temperature	7 °C
Water outlet temperature	12 °C
Air inlet temperature	27 °C
Relative humidity	47 %

AQUARIS KWB 10-2-R	max.	medium	min.
Air volume (m³/h)	200	140	95
Total capacity (kW)	1.27	0.95	0.68
Sensible capacity (kW)	0.95	0.70	0.49
Amount of water (l/h)	219	163	116
Pressure loss Water-side (kPa)	7.42	4.40	2.44
sound power level [dB(A)]	40.9	33.9	28.3
Sound pressure level* [dB(A)]	36.6	29.6	24.0

Room = 55 m³
Distance from noise source r = 2 m
Direction of noise source Q = 4
Sound absorption coefficient α = 0.15

AQUARIS KWB 10-4-R	max.	medium	min.
Air volume (m³/h)	195	135	95
Heating capacity (kW)	1.35	1.05	0.81
Amount of water (l/h)	117	90	70
Pressure loss Water-side (kPa)	3.36	2.14	1.37

Assumptions for AQUARIS KWB 20

Water inlet temperature	7 °C
Water outlet temperature	12 °C
Air inlet temperature	27 °C
Relative humidity	47 %

AQUARIS KWB 20-2-R	max.	medium	min.
Air volume (m³/h)	315	260	230
Total capacity (kW)	1.95	1.67	1.51
Sensible capacity (kW)	1.46	1.24	1.12
Amount of water (l/h)	335	287	259
Pressure loss Water-side (kPa)	6.42	4.88	4.09
sound power level [dB(A)]	43.1	38.7	35.7
Sound pressure level* [dB(A)]	38.8	34.4	31.4

AQUARIS KWB 20-4-R	max.	medium	min.
Air volume (m³/h)	305	255	225
Heating capacity (kW)	2.07	1.83	1.68
Amount of water (l/h)	179	158	145
Pressure loss Water-side (kPa)	9.04	7.28	6.25

Room = 55 m³
Distance from noise source r = 2 m
Direction of noise source Q = 4
Sound absorption coefficient α = 0.15

AQUARIS KWB - Compact air-conditioning module

Dimensions

AQUARIS KWB 10

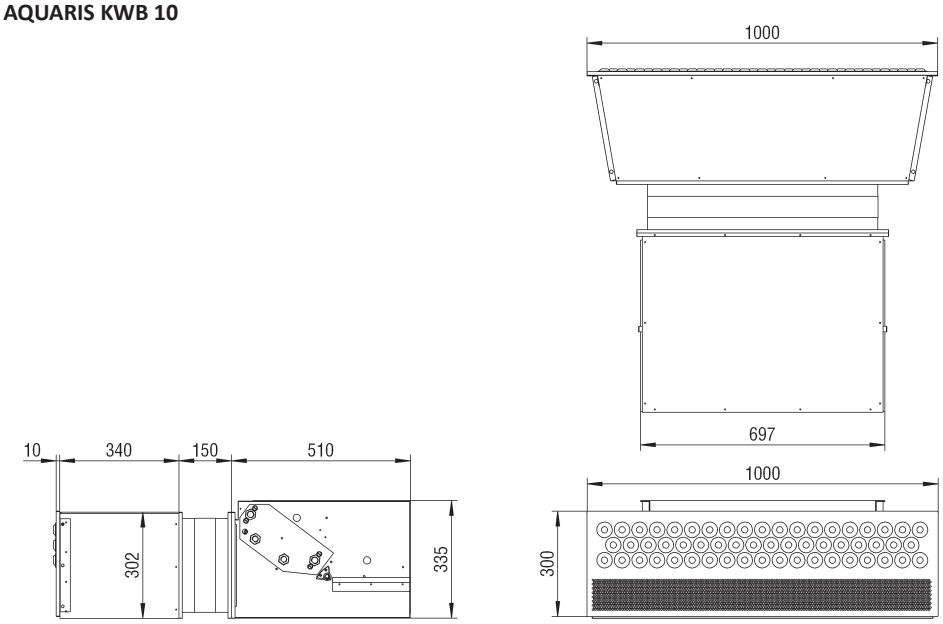

AQUARIS KWB 20

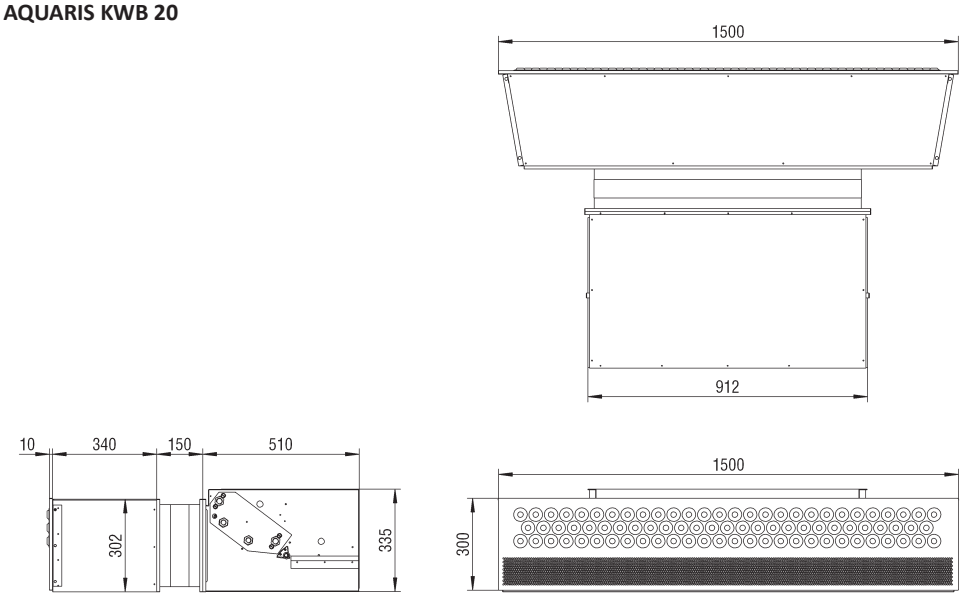

NBS - Room air conditioning module

Properties

- High energy efficiency.
- High performance (compensation of high thermal loads).
- Low noise level.
- Compact dimensions and low mounting height.
- Low installation and maintenance expenditure.
- Decentral air conditioning.
- Volumetric flow: von 500-3500 m^3/h / 1500-6000 m^3/h.
- Available static pressure: from 5-150 Pa/40-250 Pa.
- Cooling capacity: from 3-16 kW/10-32 kW.
- Heating capacity: from 5-25 kW/8-45 kW.
- Filtering efficiency: G3/filter G3 or G4.

Quick selection

	V_L (m^3/h)	p_s (Pa)	W	Heating	Cooling	
				Q (kW)	Q_T (kW)	Q_S (kW)
NBS-100-3	1360	135	274	7.21	9.63	7.04
NBS-150-3	3529	225	1300	16.04	22.15	16.60

Dimensions

NBS-100

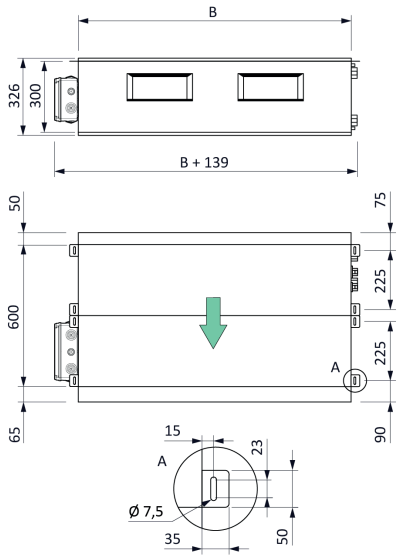

Available sizes NBS-100

Model	B (mm)	Weight (kg)				
		Device unit*	Box 300 mm	Mixing unit	Water	
					Cooling	Heating
-100-1	680	36	9	18.5	1.89	0.89
-100-2	1150	56	13	24.0	3.39	1.69
-100-3	1660	75	17	29.5	5.04	2.55

* = Housing + empty heat exchanger + motorised fan + air filter

NBS - Room air conditioning module

Dimensions

NBS-150

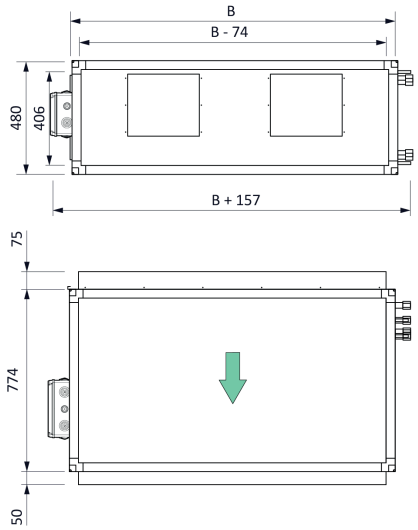

Available sizes NBS-150

Model	B (mm)	Weight (kg)				
		Device unit*	Box 300 mm	Mixing unit	Water	
					Cooling	Heating
-150-1	874	57	11	20	3.50	1.73
-150-2	1374	77	15	26	5.82	2.97
-150-3	1824	98	18.5	33	7.82	3.95

* = Housing + empty heat exchanger + motorised fan + air filter

CSL - Cultra Studioline – Room air-conditioning module

Properties

- Very quiet, for strict acoustics requirements.
- High cooling and heating capacities.
- Flexible mounting and installation versions.
- Control technology adapted to any demand.
- Energy-efficient, decentralised air-conditioning.
- Low power consumption thanks to efficient EC motors with continuous control g 0…10 V.
- Easy installation (connection prepared).
- Installation in front of the wall, in the wall, in a cabinet, and in the ceiling.
- Fast, convenient maintenance thanks to removable inspection cover and filter with clip system.

Quick selection

		CSL-1					CSL-2					CSL-3				
Speed	**(Volts)**	**2**	**4**	**6**	**8**	**10**	**2**	**4**	**6**	**8**	**10**	**2**	**4**	**6**	**8**	**10**
Air flow	**(m^3/h)**	203	326	438	528	587	265	420	571	700	788	299	477	657	812	916
Total cooling capacity	**(kW)**	1.51	2.26	2.85	3.28	3.54	1.87	2.82	3.63	4.24	4.63	2.25	3.44	4.51	5.35	5.87
Sensible cooling capacity	**(kW)**	1.11	1.67	2.12	2.45	2.66	1.38	2.09	2.70	3.18	3.49	1.63	2.50	3.30	3.93	4.33
Total heating capacity	**(kW)**	1.50	2.24	2.84	3.28	3.56	1.87	2.82	3.64	4.27	4.68	2.17	3.33	4.38	5.23	5.76
Total heating capacity, 4-pipe	**(kW)**	1.66	2.18	2.54	2.79	2.93	2.24	2.96	3.47	3.83	4.06	2.78	3.71	4.40	4.89	5.17
Sound power level L_{WA}	**[dB(A)]**	33	30	33	38	40	23	27	32	36	39	22	26	32	37	40

Cooling: T_Water inlet/outlet/room = 7 / 12 / 27 °C, RF = 47 %.
Heating: T_Water inlet/outlet/room = 45/40/20 °C; (4-pipe) 65/55/20 °C.

Dimensions

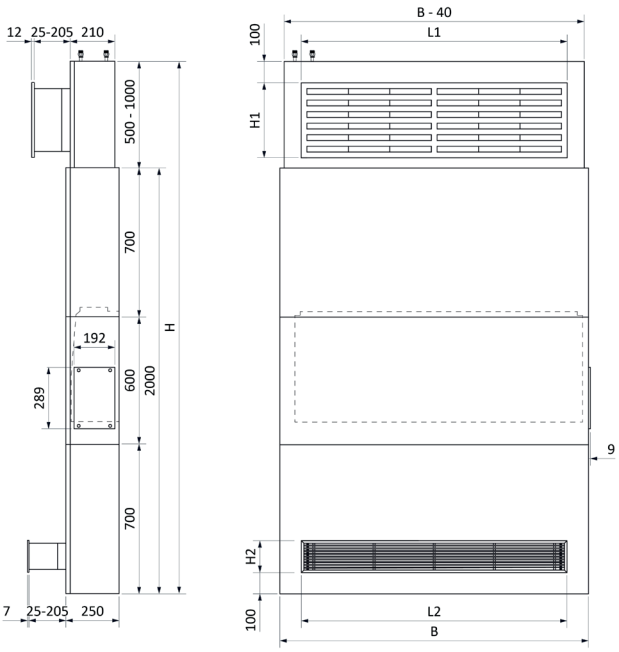

Available sizes

Size	Dimensions (mm)						Weight (kg)
	Cultra Studioline		Supply air diffuser		Secondary air grille		
	B	H	L1	H1	L2	H2	
CSL-1	900	2500 (standard) to 3000	650	352	648	252	74
CSL-2	1100		1050	352	1048	152	91
CSL-3	1450		1250	352	1248	152	110

CNVA - Active floor convector

Properties

- Stable, high-performance floor convector model CNVA for forced convection.
- Consisting of a sheet steel housing with frame and grille insert made of extruded aluminium, natural colour anodised E6 EV1 as standard.
- All inner parts painted in RAL 9005, black.
- 2-pipe heat exchanger (standard).
- 4-pipe heat exchanger (optional, for cooling and heating, with galvanised sheet steel frame, copper pipes, and aluminium blades), suitable for water quality as defined in VDI2035.
- The fan is driven by an EC motor.

Quick selection

CNVA-...-H2

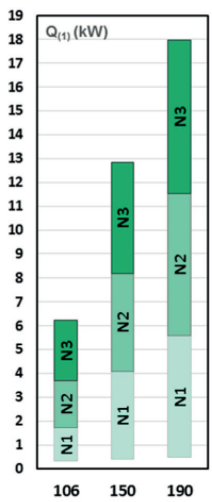

CNVA-...-H2 Heating

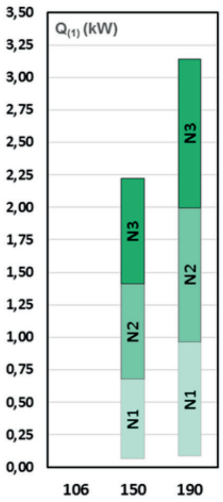

CNVA-...-H2 Cooling

CNVA-...-H4

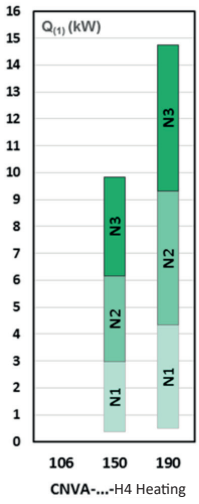

CNVA-...-H4 Heating

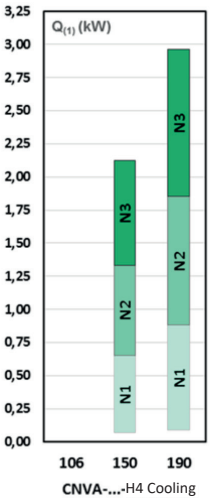

CNVA-...-H4 Cooling

Nominal length

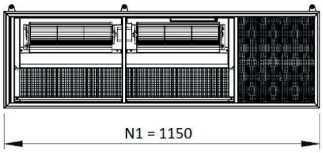

N1 = 1150

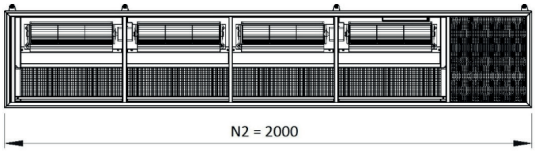

N2 = 2000

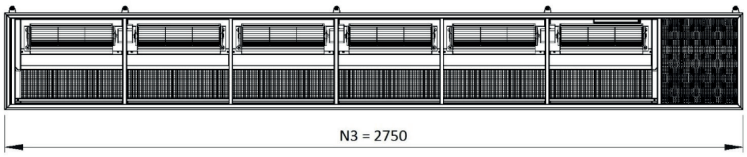

N3 = 2750

Dimensions

Width and Height

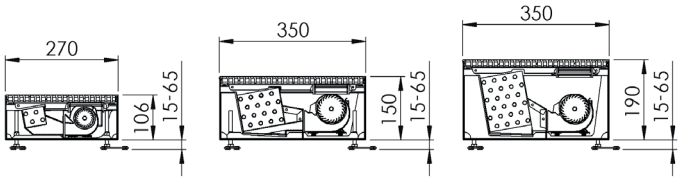

CNV - Floor convector

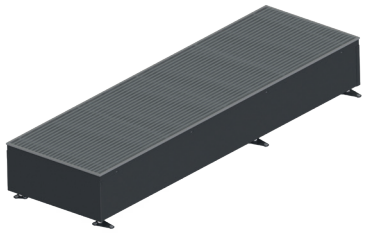

Properties

- The floor convector type CNV is designed for installation in floors and false floors.
- It is typically used in apartments, offices and shopping centres.
- It is primarily installed near large glass surfaces.
- Housing made of galvanised sheet steel.
- Galvanised sheet steel battery frame with aluminium blades and copper pipes.
- Walk-on aluminium grille (PA outflow grille).

Quick selection

CNV-190

		CNV-190-90			CNV-190-106			CNV-190-150			CNV-190-190		
	L (mm)	Q (W)	V_w (l/h)	Pa_w (kPa)	Q (W)	V_w (l/h)	Pa_w (kPa)	Q (W)	V_w (l/h)	Pa_w (kPa)	Q (W)	V_w (l/h)	Pa_w (kPa)
ΔT = 30 K (t1- = 55 °C / t2 = 45 °C / tr = 20 °C)	850	68	6	0.00	76	6	0.00	94	8	0.00	95	8	0.00
	1150	104	9	0.00	117	10	0.00	145	12	0.01	147	13	0.01
	1450	141	12	0.01	158	14	0.01	196	17	0.03	198	17	0.03
	1750	178	15	0.02	199	17	0.02	247	21	0.06	250	22	0.06
	2050	215	18	0.03	240	21	0.03	298	26	0.09	302	26	0.09
	2350	252	22	0.04	281	24	0.05	350	30	0.14	354	30	0.14
	2650	289	25	0.06	323	28	0.07	401	34	0.20	405	35	0.20
	2950	326	28	0.08	364	31	0.09	452	39	0.27	457	39	0.28
	3250	362	31	0.10	405	35	0.12	503	43	0.36	509	44	0.37
	3550	399	34	0.13	446	38	0.16	554	48	0.47	561	48	0.48
	3850	436	38	0.17	487	42	0.20	605	52	0.60	612	53	0.61
ΔT = 50 K (t1 = 75 °C / t2 = 65 °C / tr = 20 °C)	850	134	12	0.00	144	12	0.00	183	16	0.01	196	17	0.01
	1150	208	18	0.01	222	19	0.01	283	24	0.04	302	26	0.05
	1450	281	24	0.03	301	26	0.03	383	33	0.09	409	35	0.10
	1750	354	30	0.05	380	33	0.06	483	42	0.17	515	44	0.19
	2050	427	37	0.08	458	39	0.09	58,	50	0.28	622	54	0.32
	2350	501	43	0.12	537	46	0.14	683	59	0.43	729	63	0.48
	2650	574	49	0.18	615	53	0.20	782	67	0.62	835	72	0.69
	2950	647	56	0.25	694	60	0.28	882	76	0.85	942	81	0.95
	3250	721	62	0.33	772	66	0.37	982	84	1.13	1049	90	1.26
	3550	794	68	0.42	851	73	0.48	1082	93	1.46	1155	99	1.64
	3850	867	75	0.53	929	80	0.60	1182	102	1.85	1262	109	2.07

CNV - Floor convector

CNV-270

		CNV-270-90			CNV-270-106			CNV-270-150			CNV-270-190		
	L (mm)	Q (W)	V_W (l/h)	Pa_w (kPa)	Q (W)	V_W (l/h)	Pa_w (kPa)	Q (W)	V_W (l/h)	Pa_w (kPa)	Q (W)	V_W (l/h)	Pa_w (kPa)
ΔT = 30 K (t1- = 55 °C / t2 = 45 °C / tr = 20 °C)	850	78	7	0.00	96	8	0.00	156	13	0.00	170	15	0.00
	1150	120	10	0.00	148	13	0.00	241	21	0.01	263	23	0.01
	1450	162	14	0.00	200	17	0.00	325	28	0.02	356	31	0.03
	1750	205	18	0.01	253	22	0.01	410	35	0.04	449	39	0.05
	2050	247	21	0.01	305	26	0.02	495	43	0.07	542	47	0.08
	2350	289	25	0.02	357	31	002	580	50	0.11	634	55	0.12
	2650	332	29	0.02	409	35	0.03	665	57	0.15	727	63	0.18
	2950	374	32	0.03	462	40	0.05	750	64	0.21	820	71	0.25
	3250	416	36	0.04	514	44	0.06	835	72	0.28	913	79	0.33
	3550	459	39	0.05	566	49	0.08	920	79	0.36	1006	86	0.42
	3850	501	43	0.07	619	53	0.10	1005	86	0.46	1099	94	0.54
ΔT = 50 K (t1 = 75 °C / t2 = 65 °C / tr = 20 °C)	850	165	14	0.00	204	18	0.00	330	28	0.01	353	30	0.01
	1150	255	22	0.01	315	27	0.01	509	44	0.04	546	47	0.04
	1450	345	30	0.01	426	37	0.02	689	59	0.08	739	64	0.09
	1750	436	37	0.02	538	46	0.03	869	75	0.15	931	80	0.17
	2050	536	45	0.04	649	56	005	1049	90	0.25	1124	97	0.28
	2350	616	53	0.06	760	65	0.08	1229	106	0.38	1317	113	0.43
	2650	706	61	0.08	871	75	0.12	1408	121	0.55	1510	130	0.62
	2950	796	68	0.11	983	85	0.16	1588	137	0.76	1702	146	0.86
	3250	886	76	0.15	1094	94	0.22	1768	152	1.01	1895	163	1.14
	3550	976	84	0.19	1205	104	0.28	1948	168	1.31	2088	180	1.48
	3850	1066	92	0.24	1316	113	0.35	2128	183	1.65	2280	196	1.87

CNV - Floor convector

CNV-350

		CNV-350-90			CNV-350-106			CNV-350-150			CNV-350-190		
	L (mm)	Q (W)	V_W (l/h)	Pa_w (kPa)	Q (W)	V_W (l/h)	Pa_w (kPa)	Q (W)	V_W (l/h)	Pa_w (kPa)	Q (W)	V_W (l/h)	Pa_w (kPa)
ΔT = 30 K (t1- = 55 °C / t2 = 45 °C / tr = 20 °C)	850	114	10	0.00	136	12	0.00	220	19	0.01	252	22	0.01
	1150	176	15	0.00	211	18	0.01	340	29	0.03	389	33	0.04
	1450	238	21	0.01	285	25	0.01	460	40	0.06	526	45	0.08
	1750	301	26	0.02	359	31	0.02	580	50	0.11	664	57	0.15
	2050	363	31	0.02	434	37	0.03	699	60	0.19	801	69	0.24
	2350	425	37	0.04	508	44	0.05	813	70	0.29	938	81	0.37
	2650	487	42	0.05	582	50	0.07	939	81	0.42	1076	93	0.53
	2950	549	47	0.07	657	56	0.10	1059	91	0.58	1213	104	0.73
	3250	612	53	0.09	731	63	0.13	1179	101	0.77	1350	116	0.97
	3550	674	58	0.12	805	69	0.16	1299	112	0.99	1488	128	1.26
	3850	736	63	0.15	880	76	0.20	1419	122	1.26	1625	140	1.59
ΔT = 50 K (t1 = 75 °C / t2 = 65 °C / tr = 20 °C)	850	231	20	0.00	275	24	0.01	474	41	0.03	539	46	0.04
	1150	356	31	0.01	425	37	0.02	733	63	0.11	832	72	0.13
	1450	482	41	003	575	49	0.04	991	85	0.24	1126	97	0.29
	1750	608	52	0.05	724	62	0.07	1250	107	0.44	1420	122	0.54
	2050	734	63	0.08	874	75	0.11	1508	130	0.72	1713	147	0.90
	2350	859	74	0.12	1024	88	0.17	1767	152	1.09	2007	173	1.37
	2650	985	85	0.18	1174	101	0.24	2026	174	1.57	2301	198	1.97
	2950	1111	96	0.24	1324	114	0.33	2284	196	2.17	2595	223	2.71
	3250	1237	106	0.31	1474	127	0.43	2543	219	2.88	2888	248	3.61
	3550	1363	117	0.40	1624	140	0.55	2801	241	3.74	3182	274	4.68
	3850	1488	128	0.50	1774	153	0.69	3060	263	4.73	3476	299	5.93

CNV - Floor convector

CNV-400

		CNV-400-90			CNV-400-106			CNV-400-150			CNV-400-190		
	L (mm)	Q (W)	V_w (l/h)	Pa_w (kPa)	Q (W)	V_w (l/h)	Pa_w (kPa)	Q (W)	V_w (l/h)	Pa_w (kPa)	Q (W)	V_w (l/h)	Pa_w (kPa)
ΔT = 30 K (t1- = 55 °C / t2 = 45 °C / tr = 20 °C)	850	125	11	0.00	161	14	0.00	254	22	0.02	303	26	0.02
	1150	192	17	0.01	249	21	0.01	393	34	0.05	468	40	0.06
	1450	260	22	0.02	337	29	0.02	531	46	0.11	633	54	0.14
	1750	928	28	0.03	425	37	0.04	670	58	0.20	798	569	0.27
	2050	396	34	0.05	513	44	0.07	809	70	0.33	963	83	0.44
	2350	464	40	0.07	601	52	0.11	947	81	0.50	1128	97	0.67
	2650	532	46	0.10	689	59	0.016	1086	93	0.72	1293	111	0.97
	2950	600	52	0.14	777	67	0.22	1225	105	0.99	1458	125	1.34
	3250	668	57	0.19	865	74	0.30	1363	117	1.32	1623	140	1.79
	3550	736	63	0.25	953	82	0.39	1502	129	1.71	1788	154	2.32
	3850	804	69	0.31	1041	90	0.49	1641	141	2.16	1953	168	2.94
ΔT = 50 K (t1 = 75 °C / t2 = 65 °C / tr = 20 °C)	850	264	23	0.01	325	28	0.01	521	45	0.05	636	55	0.08
	1150	408	35	0.03	503	43	0.04	805	69	0.17	983	85	0.24
	1450	551	47	0.06	680	59	0.08	1089	94	0.37	1330	114	0.53
	1750	695	60	0.10	858	74	0.15	1373	118	0.69	1677	144	0.98
	2050	839	72	0.17	1035	89	0.25	1657	143	1.13	2024	174	1.61
	2350	983	85	0.26	1213	104	0.37	1941	167	1.72	2371	204	2.45
	2650	1127	97	0.37	1391	120	0.54	2225	191	2.48	2719	234	3.53
	2950	1271	109	0.51	1568	135	0.74	2509	216	3.42	3066	264	4.87
	3250	1415	122	0.68	1746	150	0.99	2794	240	4.55	3413	293	6.49
	3550	1558	134	0.88	1923	165	1.28	3078	265	5.90	3760	323	8.41
	3850	1702	146	1.12	2101	181	1.62	3362	289	7.47	4107	353	10.66

CNV - Floor convector

Dimensions

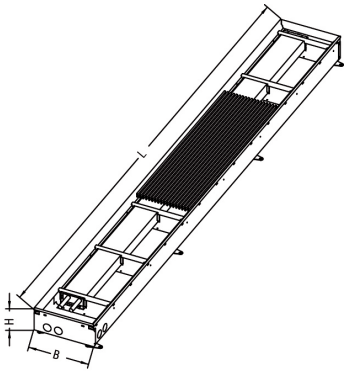

W = Width
H = height
NL = Nominal length

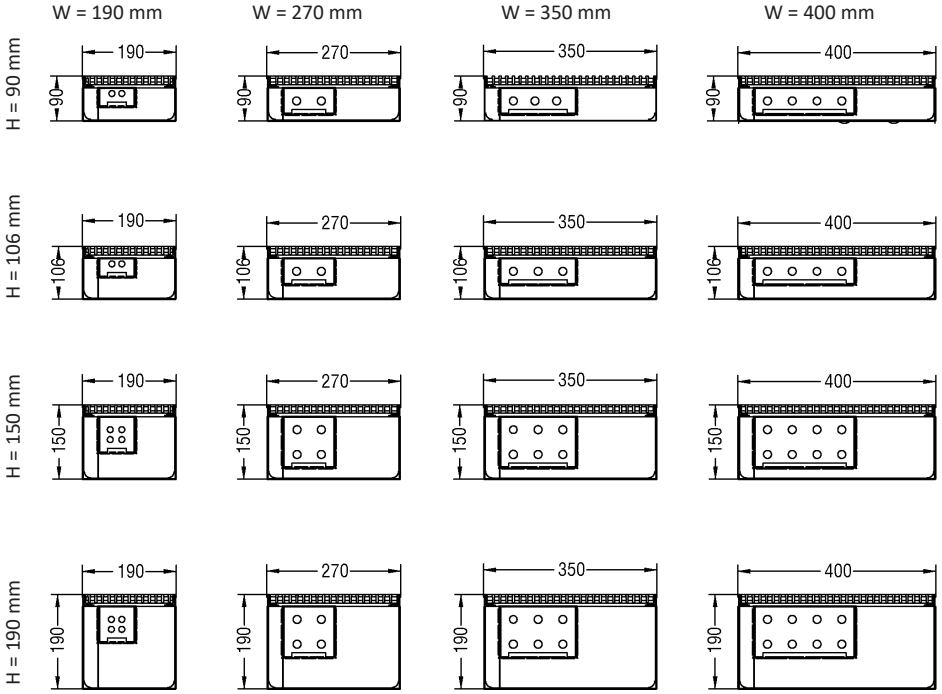

Available sizes

Model	B (mm)	H (mm)	NL (mm)	Weights* (kg/m)	Amount of water (l/m)
-190	190	90	850	7.5	0.20
-190	190	106	1150	8.0	0.20
-190	190	150		9.9	0.40
-190	190	190	1450	11.2	0.40
-270	270	90	1750	9.2	0.38
-270	270	106		9.7	0.38
-270	270	150	2050	11.7	0.75
-270	270	190	2350	12.9	0.75
-350	350	90		11.4	1.11
-350	350	106	2650	11.9	1.11
-350	350	150	2950	14.8	1.12
-350	350	190		15.9	1.12
-400	400	90	3250	12.9	0.75
-400	400	106	3550	13.6	0.75
-400	400	150		17.0	1.48
-400	400	190	3850	18.3	1.48

* Dry weight per metre with linear grille, frame, spacer bridges and water register, without connections.

Appendix

ATEX series

	Certifications
Fire dampers	
BKA-EN BKP-EN BSK-RPR	II 2G Ex h IIC T6 Gb II 2D Ex h IIIC T80° Db
Silencer	
MWK-OB MWS-OB MBK-MB MBS-MB	II 2G Ex h IIB T6 Gb II 2D Ex h IIIC T80°C Db
Duct silencer	
RS-N RS-M	II 2G Ex h IIB T6 Gb II 2D Ex h IIIC T80°C Db
Ceiling diffusers	
4DF DQJ IKA PIL	II 2G Ex h IIC T6 Gb II 2D Ex h IIIC T80°C Db
Ventilation grille	
IB-Q IB-R	II 2G Ex h IIC T6 Gb II 2D Ex h IIIC T80°C Db
Long throw nozzle	
WDAEX	II 2G Ex h IIB Gb II 2D Ex h IIIC Db
Particle filter units	
FKF-Ex	II 2G Ex h IIB T6 Gb II 2D Ex h IIIC T80°C Db
Controlled volumetric flow controllers	
VREX VQEX VPEX	II 2G Ex h IIC T6 Gb II 2D Ex h IIIC T80° Db
Mechanical volumetric flow controllers	
VM-PRO-R-Ex VM-PRO-Q-Ex	II 2G Ex h IIC T6 Gb II 2D Ex h IIIC T80°C Db
Multi-leaf damper	
HK JK	II 2G Ex h IIC T6 Gb II 2D Ex h IIIC T80°C Db

Sound level calculation

Correction for multiple sound sources with equal sound levels

Diagram 1 shows correction for multiple sound sources with equal sound levels.
The following relationship applies: Lges = L + 10 * log(n) with n being the number of sound sources.

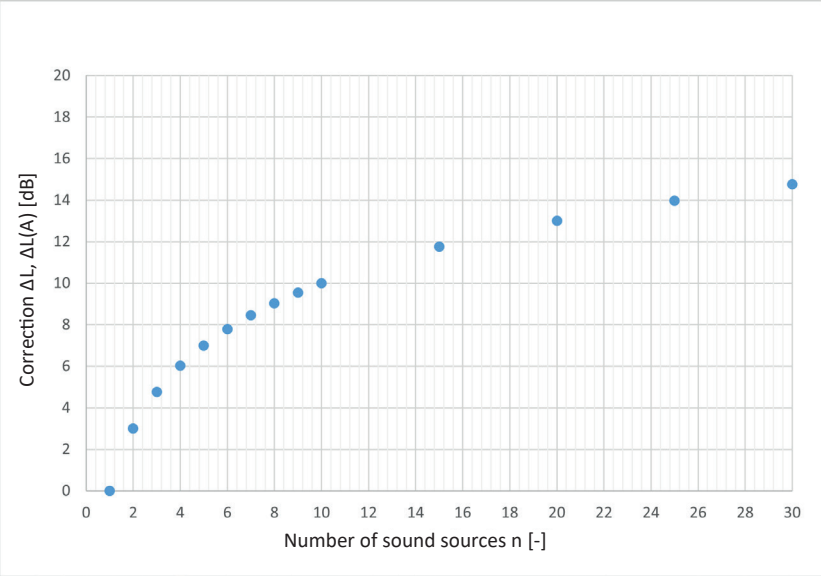

Diagram 1: Correction for multiple sound sources with equal sound levels.

Correction for two sound sources with different sound levels

Correction ΔL for two different sound levels is calculated as follows: $\Delta L = 10\lg(1-10^{-|dL|/10})$
Diagram 2 shows the relationship:

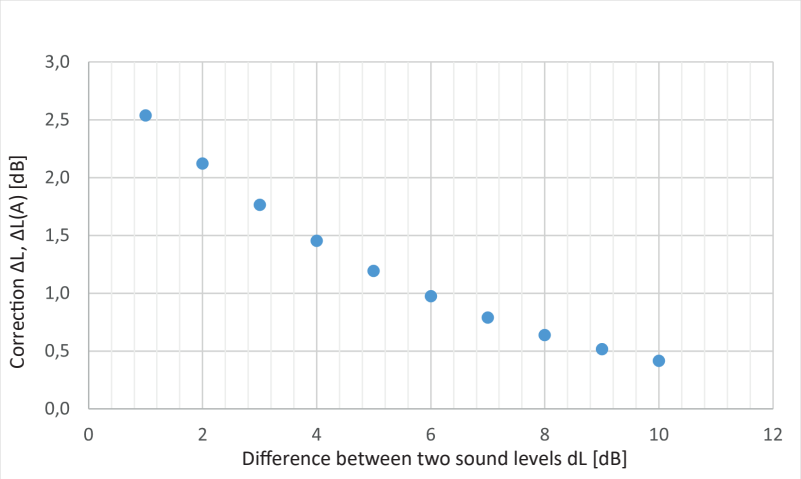

Diagram 2: Correction for two sound sources with different sound levels.

SCHAKO KG
Steigstraße 25-27
78600 Kolbingen
schako.com
Tel.: +49 7463 980-0
E-mail: info@schako.de

Version: 2024-01-09